Low-Power Sub-1 GHz RF Transceiver

Applications

- *Ultra low-power wireless applications operating in the 315/433/868/915 MHz ISM/SRD bands*
- *Wireless alarm and security systems*
- *Industrial monitoring and control*
- *Wireless sensor networks*
- *AMR – Automatic Meter Reading*
- *Home and building automation*
- *Wireless MBUS*

Product Description

CC1101 is a low-cost sub-1 GHz transceiver designed for very low-power wireless applications. The circuit is mainly intended for the ISM (Industrial, Scientific and Medical) and SRD (Short Range Device) frequency bands at 315, 433, 868, and 915 MHz, but can easily be programmed for operation at other frequencies in the 300-348 MHz, 387-464 MHz and 779-928 MHz bands.

The RF transceiver is integrated with a highly configurable baseband modem. The modem supports various modulation formats and has a configurable data rate up to 600 kbps.

CC1101 provides extensive hardware support for packet handling, data buffering, burst transmissions, clear channel assessment, link quality indication, and wake-on-radio.

The main operating parameters and the 64-byte transmit/receive FIFOs of **CC1101** can be controlled via an SPI interface. In a typical system, the **CC1101** will be used together with a microcontroller and a few additional passive components.

The **CC1190** 850-950 MHz range extender [21] can be used with **CC1101** in long range applications for improved sensitivity and higher output power.

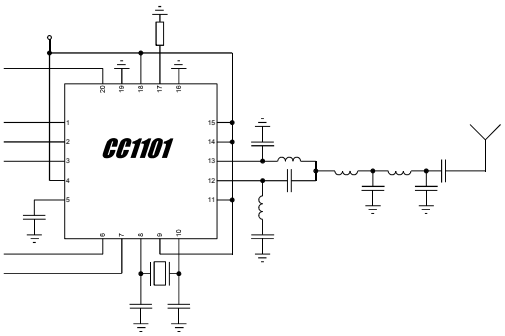

Key Features

RF Performance

- High sensitivity
  - -116 dBm at 0.6 kBaud, 433 MHz, 1% packet error rate
  - -112 dBm at 1.2 kBaud, 868 MHz, 1% packet error rate
- Low current consumption (14.7 mA in RX, 1.2 kBaud, 868 MHz)
- Programmable output power up to +12 dBm for all supported frequencies
- Excellent receiver selectivity and blocking performance
- Programmable data rate from 0.6 to 600 kbps
- Frequency bands: 300-348 MHz, 387-464 MHz and 779-928 MHz

Analog Features

- 2-FSK, 4-FSK, GFSK, and MSK supported as well as OOK and flexible ASK shaping
- Suitable for frequency hopping systems due to a fast settling frequency synthesizer; 75 µs settling time
- Automatic Frequency Compensation (AFC) can be used to align the frequency synthesizer to the received signal centre frequency
- Integrated analog temperature sensor

Digital Features

- Flexible support for packet oriented systems; On-chip support for sync word detection, address check, flexible packet length, and automatic CRC handling
- Efficient SPI interface; All registers can be programmed with one “burst” transfer
- Digital RSSI output
- Programmable channel filter bandwidth
- Programmable Carrier Sense (CS) indicator
- Programmable Preamble Quality Indicator (PQI) for improved protection against false sync word detection in random noise
- Support for automatic Clear Channel Assessment (CCA) before transmitting (for listen-before-talk systems)
- Support for per-package Link Quality Indication (LQI)
- Optional automatic whitening and de-whitening of data

Low-Power Features

- 200 nA sleep mode current consumption
- Fast startup time; 240 µs from sleep to RX or TX mode (measured on EM reference design [1] and [2])
- Wake-on-radio functionality for automatic low-power RX polling
- Separate 64-byte RX and TX data FIFOs (enables burst mode data transmission)

General

- Few external components; Completely on-chip frequency synthesizer, no external filters or RF switch needed
- Green package: RoHS compliant and no antimony or bromine
- Small size (QLP 4x4 mm package, 20 pins)
- Suited for systems targeting compliance with EN 300 220 (Europe) and FCC CFR Part 15 (US)
- Suited for systems targeting compliance with the Wireless MBUS standard EN 13757-4:2005
- Support for asynchronous and synchronous serial receive/transmit mode for backwards compatibility with existing radio communication protocols

Improved Range using CC1190

- The ***CC1190*** [21] is a range extender for 850-950 MHz and is an ideal fit for ***CC1101*** to enhance RF performance
- High sensitivity
  - -118 dBm at 1.2 kBaud, 868 MHz, 1% packet error rate
  - -120 dBm at 1.2 kBaud, 915 MHz, 1% packet error rate
- +20 dBm output power at 868 MHz
- +27 dBm output power at 915 MHz
- Refer to AN094 [22] and AN096 [23] for more performance figures of the ***CC1101*** + ***CC1190*** combination

Reduced Battery Current using TPS62730

- The TPS62730 [26] is a step down converter with bypass mode for ultra low power wireless applications.
- In RX, the current drawn from a 3.6 V battery is typically less than 11 mA when TPS62730 output voltage is 2.1 V. When connecting CC1101 directly to a 3.6 V battery the current drawn is typically 17 mA (see Figure 1)
- In TX, at maximum output power (+12 dBm), the current drawn from a 3.6 V battery is typically 22 mA when TPS62730 output voltage is 2.1 V. When connecting CC1101 directly to a 3.6 V battery the current drawn is typically 34 mA (see Figure 2).
- When CC1101 enters SLEEP mode, the TPS62730 can be put in bypass mode for very low power down current
- The typical TPS62730 current consumption is 30 nA in bypass mode.
- The CC1101 is connected to the battery via an integrated 2.1 Ω (typical) switch in bypass mode

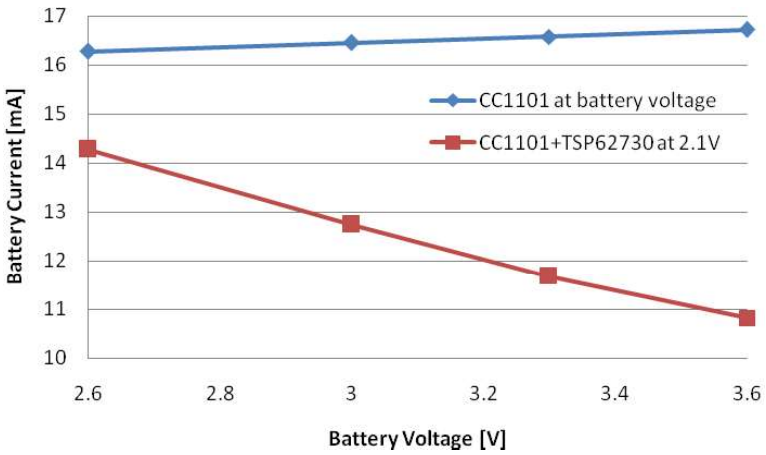

Figure 1: Typical RX Battery Current vs Battery Voltage

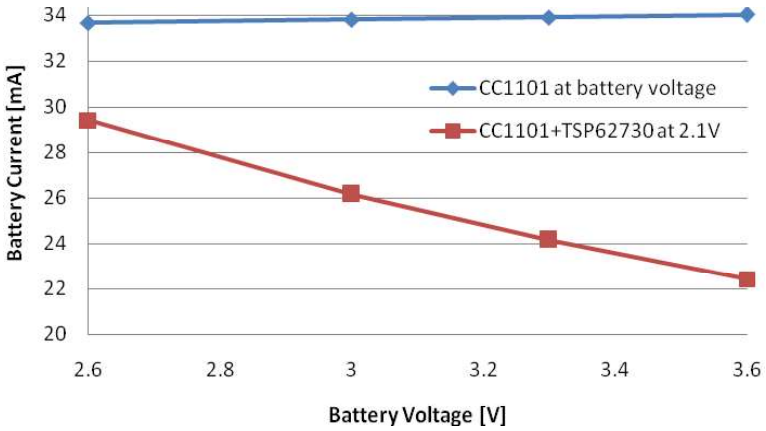

Figure 2: Typical TX Battery Current vs Battery Voltage at Maximum CC1101 Output Power (+12 dBm)

Abbreviations

Abbreviations used in this data sheet are described below.

2-FSK	Binary Frequency Shift Keying
4-FSK	Quaternary Frequency Shift Keying
ACP	Adjacent Channel Power
ADC	Analog to Digital Converter
AFC	Automatic Frequency Compensation
AGC	Automatic Gain Control
AMR	Automatic Meter Reading
ASK	Amplitude Shift Keying
BER	Bit Error Rate
BT	Bandwidth-Time product
CCA	Clear Channel Assessment
CFR	Code of Federal Regulations
CRC	Cyclic Redundancy Check
CS	Carrier Sense
CW	Continuous Wave (Unmodulated Carrier)
DC	Direct Current
DVGA	Digital Variable Gain Amplifier
ESR	Equivalent Series Resistance
FCC	Federal Communications Commission
FEC	Forward Error Correction
FIFO	First-In-First-Out
FHSS	Frequency Hopping Spread Spectrum
FS	Frequency Synthesizer
GFSK	Gaussian shaped Frequency Shift Keying
IF	Intermediate Frequency
I/Q	In-Phase/Quadrature
ISM	Industrial, Scientific, Medical
LC	Inductor-Capacitor
LNA	Low Noise Amplifier
LO	Local Oscillator
LSB	Least Significant Bit
LQI	Link Quality Indicator
MCU	Microcontroller Unit
MSB	Most Significant Bit
MSK	Minimum Shift Keying
N/A	Not Applicable
NRZ	Non Return to Zero (Coding)
OOK	On-Off Keying
PA	Power Amplifier
PCB	Printed Circuit Board
PD	Power Down
PER	Packet Error Rate
PLL	Phase Locked Loop
POR	Power-On Reset
PQI	Preamble Quality Indicator
PQT	Preamble Quality Threshold
PTAT	Proportional To Absolute Temperature
QLP	Quad Leadless Package
QPSK	Quadrature Phase Shift Keying
RC	Resistor-Capacitor
RF	Radio Frequency
RSSI	Received Signal Strength Indicator
RX	Receive, Receive Mode
SAW	Surface Aqustic Wave
SMD	Surface Mount Device
SNR	Signal to Noise Ratio
SPI	Serial Peripheral Interface
SRD	Short Range Devices
TBD	To Be Defined
T/R	Transmit/Receive
TX	Transmit, Transmit Mode
UHF	Ultra High frequency
VCO	Voltage Controlled Oscillator
WOR	Wake on Radio, Low power polling
XOSC	Crystal Oscillator
XTAL	Crystal

Table Of Contents

APPLICATIONS 1
PRODUCT DESCRIPTION 1
KEY FEATURES 2
RF PERFORMANCE 2
ANALOG FEATURES 2
DIGITAL FEATURES 2
LOW-POWER FEATURES 2
GENERAL 2
IMPROVED RANGE USING CC1190 2
REDUCED BATTERY CURRENT USING TPS62730 3
ABBREVIATIONS 4
TABLE OF CONTENTS 5
1 ABSOLUTE MAXIMUM RATINGS 8
2 OPERATING CONDITIONS 8
3 GENERAL CHARACTERISTICS 8
4 ELECTRICAL SPECIFICATIONS 9
4.1 CURRENT CONSUMPTION 9
4.2 RF RECEIVE SECTION 12
4.3 RF TRANSMIT SECTION 16
4.4 CRYSTAL OSCILLATOR 18
4.5 LOW POWER RC OSCILLATOR 18
4.6 FREQUENCY SYNTHESIZER CHARACTERISTICS 19
4.7 ANALOG TEMPERATURE SENSOR 19
4.8 DC CHARACTERISTICS 20
4.9 POWER-ON RESET 20
5 PIN CONFIGURATION 20
6 CIRCUIT DESCRIPTION 22
7 APPLICATION CIRCUIT 22
7.1 BIAS RESISTOR 22
7.2 BALUN AND RF MATCHING 23
7.3 CRYSTAL 23
7.4 REFERENCE SIGNAL 23
7.5 ADDITIONAL FILTERING 24
7.6 POWER SUPPLY DECOUPLING 24
7.7 ANTENNA CONSIDERATIONS 24
7.8 PCB LAYOUT RECOMMENDATIONS 26
8 CONFIGURATION OVERVIEW 27
9 CONFIGURATION SOFTWARE 29
10 4-WIRE SERIAL CONFIGURATION AND DATA INTERFACE 29
10.1 CHIP STATUS BYTE 31
10.2 REGISTER ACCESS 31
10.3 SPI READ 32
10.4 COMMAND STROBES 32
10.5 FIFO ACCESS 32
10.6 PATABLE ACCESS 33
11 MICROCONTROLLER INTERFACE AND PIN CONFIGURATION 34
11.1 CONFIGURATION INTERFACE 34
11.2 GENERAL CONTROL AND STATUS PINS 34
11.3 OPTIONAL RADIO CONTROL FEATURE 34
12 DATA RATE PROGRAMMING 35

13 RECEIVER CHANNEL FILTER BANDWIDTH 35
14 DEMODULATOR, SYMBOL SYNCHRONIZER, AND DATA DECISION 36
14.1 FREQUENCY OFFSET COMPENSATION 36
14.2 BIT SYNCHRONIZATION 36
14.3 BYTE SYNCHRONIZATION 36
15 PACKET HANDLING HARDWARE SUPPORT 37
15.1 DATA WHITENING 37
15.2 PACKET FORMAT 38
15.3 PACKET FILTERING IN RECEIVE MODE 40
15.4 PACKET HANDLING IN TRANSMIT MODE 40
15.5 PACKET HANDLING IN RECEIVE MODE 41
15.6 PACKET HANDLING IN FIRMWARE 41
16 MODULATION FORMATS 42
16.1 FREQUENCY SHIFT KEYING 42
16.2 MINIMUM SHIFT KEYING 43
16.3 AMPLITUDE MODULATION 43
17 RECEIVED SIGNAL QUALIFIERS AND LINK QUALITY INFORMATION 43
17.1 SYNC WORD QUALIFIER 43
17.2 PREAMBLE QUALITY THRESHOLD (PQT) 44
17.3 RSSI 44
17.4 CARRIER SENSE (CS) 46
17.5 CLEAR CHANNEL ASSESSMENT (CCA) 48
17.6 LINK QUALITY INDICATOR (LQI) 48
18 FORWARD ERROR CORRECTION WITH INTERLEAVING 48
18.1 FORWARD ERROR CORRECTION (FEC) 48
18.2 INTERLEAVING 49
19 RADIO CONTROL 50
19.1 POWER-ON START-UP SEQUENCE 50
19.2 CRYSTAL CONTROL 51
19.3 VOLTAGE REGULATOR CONTROL 52
19.4 ACTIVE MODES (RX AND TX) 52
19.5 WAKE ON RADIO (WOR) 53
19.6 TIMING 54
19.7 RX TERMINATION TIMER 55
20 DATA FIFO 56
21 FREQUENCY PROGRAMMING 57
22 VCO 58
22.1 VCO AND PLL SELF-CALIBRATION 58
23 VOLTAGE REGULATORS 58
24 OUTPUT POWER PROGRAMMING 59
25 SHAPING AND PA RAMPING 60
26 GENERAL PURPOSE / TEST OUTPUT CONTROL PINS 61
27 ASYNCHRONOUS AND SYNCHRONOUS SERIAL OPERATION 63
27.1 ASYNCHRONOUS SERIAL OPERATION 63
27.2 SYNCHRONOUS SERIAL OPERATION 63
28 SYSTEM CONSIDERATIONS AND GUIDELINES 64
28.1 SRD REGULATIONS 64
28.2 FREQUENCY HOPPING AND MULTI-CHANNEL SYSTEMS 64
28.3 WIDEBAND MODULATION WHEN NOT USING SPREAD SPECTRUM 65
28.4 WIRELESS MBUS 65
28.5 DATA BURST TRANSMISSIONS 65
28.6 CONTINUOUS TRANSMISSIONS 65
28.7 BATTERY OPERATED SYSTEMS 66
28.8 INCREASING RANGE 66

29 CONFIGURATION REGISTERS 66
29.1 CONFIGURATION REGISTER DETAILS – REGISTERS WITH PRESERVED VALUES IN SLEEP STATE 71
29.2 CONFIGURATION REGISTER DETAILS – REGISTERS THAT LOOSE PROGRAMMING IN SLEEP STATE 91
29.3 STATUS REGISTER DETAILS 92
30 SOLDERING INFORMATION 95
31 DEVELOPMENT KIT ORDERING INFORMATION 95
32 REFERENCES 96
33 GENERAL INFORMATION 97
33.1 DOCUMENT HISTORY 97

1 Absolute Maximum Ratings

Under no circumstances must the absolute maximum ratings given in Table 1 be violated. Stress exceeding one or more of the limiting values may cause permanent damage to the device.

Parameter	Min	Max	Units	Condition
Supply voltage	–0.3	3.9	V	All supply pins must have the same voltage
Voltage on any digital pin	–0.3	VDD + 0.3, max 3.9	V	
Voltage on the pins RF_P, RF_N, DCOUPL, RBIAS	–0.3	2.0	V	
Voltage ramp-up rate		120	kV/µs	
Input RF level		+10	dBm	
Storage temperature range	–50	150	°C	
Solder reflow temperature		260	°C	According to IPC/JEDEC J-STD-020
ESD		750	V	According to JEDEC STD 22, method A114, Human Body Model (HBM)
ESD		400	V	According to JEDEC STD 22, C101C, Charged Device Model (CDM)

Table 1: Absolute Maximum Ratings

Caution! *ESD sensitive device. Precaution should be used when handling the device in order to prevent permanent damage.*

2 Operating Conditions

The operating conditions for CC1101 are listed Table 2 in below.

Parameter	Min	Max	Unit	Condition
Operating temperature	-40	85	°C	
Operating supply voltage	1.8	3.6	V	All supply pins must have the same voltage

Table 2: Operating Conditions

3 General Characteristics

Parameter	Min	Typ	Max	Unit	Condition/Note
Frequency range	300		348	MHz	
	387		464	MHz	If using a 27 MHz crystal, the lower frequency limit for this band is 392 MHz
	779		928	MHz	
Data rate	0.6		500	kBaud	2-FSK
	0.6		250	kBaud	GFSK, OOK, and ASK
	0.6		300	kBaud	4-FSK (the data rate in kbps will be twice the baud rate)
	26		500	kBaud	(Shaped) MSK (also known as differential offset QPSK). Optional Manchester encoding (the data rate in kbps will be half the baud rate)

Table 3: General Characteristics

4 Electrical Specifications

4.1 Current Consumption

T_A = 25°C, VDD = 3.0 V if nothing else stated. All measurement results are obtained using the CC1101EM reference designs ([1] and [2]). Reduced current settings (`MDMCFG2.DEM_DCFILT_OFF=1`) gives a slightly lower current consumption at the cost of a reduction in sensitivity. See Table 7 for additional details on current consumption and sensitivity.

Parameter	Min	Typ	Max	Unit	Condition
Current consumption in power down modes		0.2	1	μA	Voltage regulator to digital part off, register values retained (SLEEP state). All GDO pins programmed to 0x2F (HW to 0)
		0.5		μA	Voltage regulator to digital part off, register values retained, low-power RC oscillator running (SLEEP state with WOR enabled)
		100		μA	Voltage regulator to digital part off, register values retained, XOSC running (SLEEP state with `MCSM0.OSC_FORCE_ON` set)
		165		μA	Voltage regulator to digital part on, all other modules in power down (XOFF state)
Current consumption		8.8		μA	Automatic RX polling once each second, using low-power RC oscillator, with 542 kHz filter bandwidth and 250 kBaud data rate, PLL calibration every 4th wakeup. Average current with signal in channel *below* carrier sense level (`MCSM2.RX_TIME_RSSI=1`)
		35.3		μA	Same as above, but with signal in channel *above* carrier sense level, 1.96 ms RX timeout, and no preamble/sync word found
		1.4		μA	Automatic RX polling every 15th second, using low-power RC oscillator, with 542 kHz filter bandwidth and 250 kBaud data rate, PLL calibration every 4th wakeup. Average current with signal in channel below carrier sense level (`MCSM2.RX_TIME_RSSI=1`)
		39.3		μA	Same as above, but with signal in channel *above* carrier sense level, 36.6 ms RX timeout, and no preamble/sync word found
		1.7		mA	Only voltage regulator to digital part and crystal oscillator running (IDLE state)
		8.4		mA	Only the frequency synthesizer is running (FSTXON state). This currents consumption is also representative for the other intermediate states when going from IDLE to RX or TX, including the calibration state
Current consumption, 315 MHz		15.4		mA	Receive mode, 1.2 kBaud, reduced current, input at sensitivity limit
		14.4		mA	Receive mode, 1.2 kBaud, register settings optimized for reduced current, input well above sensitivity limit
		15.2		mA	Receive mode, 38.4 kBaud, register settings optimized for reduced current, input at sensitivity limit
		14.3		mA	Receive mode, 38.4 kBaud, register settings optimized for reduced current, input well above sensitivity limit
		16.5		mA	Receive mode, 250 kBaud, register settings optimized for reduced current, input at sensitivity limit
		15.1		mA	Receive mode, 250 kBaud, register settings optimized for reduced current, input well above sensitivity limit
		27.4		mA	Transmit mode, +10 dBm output power
		15.0		mA	Transmit mode, 0 dBm output power
		12.3		mA	Transmit mode, –6 dBm output power

Parameter	Min	Typ	Max	Unit	Condition
Current consumption, 433 MHz		16.0		mA	Receive mode, 1.2 kBaud, register settings optimized for reduced current, input at sensitivity limit
		15.0		mA	Receive mode, 1.2 kBaud, register settings optimized for reduced current, input well above sensitivity limit
		15.7		mA	Receive mode, 38.4 kBaud, register settings optimized for reduced current, input at sensitivity limit
		15.0		mA	Receive mode, 38.4 kBaud, register settings optimized for reduced current, input well above sensitivity limit
		17.1		mA	Receive mode, 250 kBaud, register settings optimized for reduced current, input at sensitivity limit
		15.7		mA	Receive mode, 250 kBaud, register settings optimized for reduced current, input well above sensitivity limit
		29.2		mA	Transmit mode, +10 dBm output power
		16.0		mA	Transmit mode, 0 dBm output power
		13.1		mA	Transmit mode, –6 dBm output power
Current consumption, 868/915 MHz		15.7		mA	Receive mode, 1.2 kBaud, register settings optimized for reduced current, input at sensitivity limit. See Figure 3 for current consumption with register settings optimized for sensitivity.
		14.7		mA	Receive mode, 1.2 kBaud, register settings optimized for reduced current, input well above sensitivity limit. See Figure 3 for current consumption with register settings optimized for sensitivity.
		15.6		mA	Receive mode, 38.4 kBaud, register settings optimized for reduced current, input at sensitivity limit. See Figure 3 for current consumption with register settings optimized for sensitivity.
		14.6		mA	Receive mode, 38.4 kBaud, register settings optimized for reduced current, input well above sensitivity limit. See Figure 3 for current consumption with register settings optimized for sensitivity.
		16.9		mA	Receive mode, 250 kBaud, register settings optimized for reduced current, input at sensitivity limit. See Figure 3 for current consumption with register settings optimized for sensitivity.
		15.6		mA	Receive mode, 250 kBaud, register settings optimized for reduced current, input well above sensitivity limit. See Figure 3 for current consumption with register settings optimized for sensitivity.
		34.2		mA	Transmit mode, +12 dBm output power, 868 MHz
		30.0		mA	Transmit mode, +10 dBm output power, 868 MHz
		16.8		mA	Transmit mode, 0 dBm output power, 868 MHz
		16.4		mA	Transmit mode, –6 dBm output power, 868 MHz.
		33.4		mA	Transmit mode, +11 dBm output power, 915 MHz
		30.7		mA	Transmit mode, +10 dBm output power, 915 MHz
		17.2		mA	Transmit mode, 0 dBm output power, 915 MHz
		17.0		mA	Transmit mode, –6 dBm output power, 915 MHz

Table 4: Current Consumption

	Supply Voltage VDD = 1.8 V			Supply Voltage VDD = 3.0 V			Supply Voltage VDD = 3.6 V		
Temperature [°C]	-40	25	85	-40	25	85	-40	25	85
Current [mA], PATABLE=0xC0, +12 dBm	32.7	31.5	30.5	35.3	34.2	33.3	35.5	34.4	33.5
Current [mA], PATABLE=0xC5, +10 dBm	30.1	29.2	28.3	30.9	30.0	29.4	31.1	30.3	29.6
Current [mA], PATABLE=0x50, 0 dBm	16.4	16.0	15.6	17.3	16.8	16.4	17.6	17.1	16.7

Table 5: Typical TX Current Consumption over Temperature and Supply Voltage, 868 MHz

	Supply Voltage VDD = 1.8 V			Supply Voltage VDD = 3.0 V			Supply Voltage VDD = 3.6 V		
Temperature [°C]	-40	25	85	-40	25	85	-40	25	85
Current [mA], PATABLE=0xC0, +11 dBm	31.9	30.7	29.8	34.6	33.4	32.5	34.8	33.6	32.7
Current [mA], PATABLE=0xC3, +10 dBm	30.9	29.8	28.9	31.7	30.7	30.0	31.9	31.0	30.2
Current [mA], PATABLE=0x8E, 0 dBm	17.2	16.8	16.4	17.6	17.2	16.9	17.8	17.4	17.1

Table 6: Typical TX Current Consumption over Temperature and Supply Voltage, 915 MHz

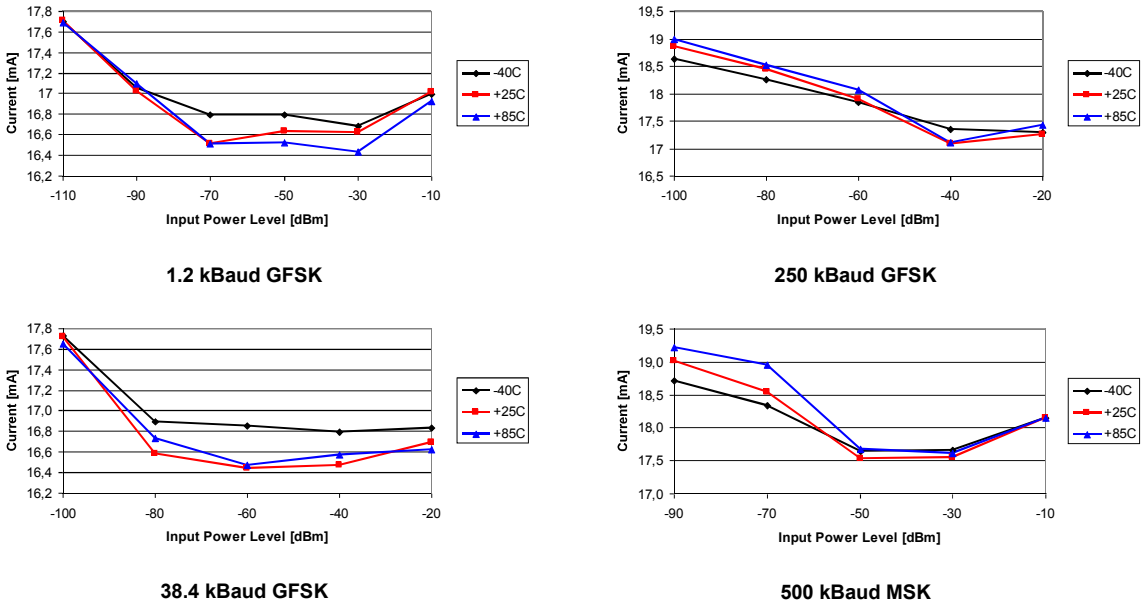

Figure 3: Typical RX Current Consumption over Temperature and Input Power Level, 868/915 MHz, Sensitivity Optimized Setting

4.2 RF Receive Section

T_A = 25°C, VDD = 3.0 V if nothing else stated. All measurement results are obtained using the CC1101EM reference designs ([1] and [2]).

Parameter	Min	Typ	Max	Unit	Condition/Note
Digital channel filter bandwidth	58		812	kHz	User programmable. The bandwidth limits are proportional to crystal frequency (given values assume a 26.0 MHz crystal)
Spurious emissions		-68 -66	–57 –47	dBm dBm	25 MHz – 1 GHz (Maximum figure is the ETSI EN 300 220 limit) Above 1 GHz (Maximum figure is the ETSI EN 300 220 limit) Typical radiated spurious emission is -49 dBm measured at the VCO frequency
RX latency		9		bit	Serial operation. Time from start of reception until data is available on the receiver data output pin is equal to 9 bit

315 MHz

1.2 kBaud data rate, sensitivity optimized, `MDMCFG2.DEM_DCFILT_OFF=0` (2-FSK, 1% packet error rate, 20 bytes packet length, 5.2 kHz deviation, 58 kHz digital channel filter bandwidth)					
Receiver sensitivity		-111		dBm	Sensitivity can be traded for current consumption by setting `MDMCFG2.DEM_DCFILT_OFF=1`. The typical current consumption is then reduced from 17.2 mA to 15.4 mA at the sensitivity limit. The sensitivity is typically reduced to -109 dBm
500 kBaud data rate, sensitivity optimized, `MDMCFG2.DEM_DCFILT_OFF=0` (MSK, 1% packet error rate, 20 bytes packet length, 812 kHz digital channel filter bandwidth)					
Receiver sensitivity		-88		dBm	`MDMCFG2.DEM_DCFILT_OFF`=1 cannot be used for data rates > 250 kBaud

433 MHz

0.6 kBaud data rate, sensitivity optimized, `MDMCFG2.DEM_DCFILT_OFF=0` (GFSK, 1% packet error rate, 20 bytes packet length, 14.3 kHz deviation, 58 kHz digital channel filter bandwidth)					
Receiver sensitivity		-116		dBm	
1.2 kBaud data rate, sensitivity optimized, `MDMCFG2.DEM_DCFILT_OFF=0` (GFSK, 1% packet error rate, 20 bytes packet length, 5.2 kHz deviation, 58 kHz digital channel filter bandwidth)					
Receiver sensitivity		-112		dBm	Sensitivity can be traded for current consumption by setting `MDMCFG2.DEM_DCFILT_OFF=1`. The typical current consumption is then reduced from 18.0 mA to 16.0 mA at the sensitivity limit. The sensitivity is typically reduced to -110 dBm
38.4 kBaud data rate, sensitivity optimized, `MDMCFG2.DEM_DCFILT_OFF=0` (GFSK, 1% packet error rate, 20 bytes packet length, 20 kHz deviation, 100 kHz digital channel filter bandwidth)					
Receiver sensitivity		–104		dBm	
250 kBaud data rate, sensitivity optimized, `MDMCFG2.DEM_DCFILT_OFF=0` (GFSK, 1% packet error rate, 20 bytes packet length, 127 kHz deviation, 540 kHz digital channel filter bandwidth)					
Receiver sensitivity		-95		dBm	

868/915 MHz

1.2 kBaud data rate, sensitivity optimized, `MDMCFG2.DEM_DCFILT_OFF=0` (GFSK, 1% packet error rate, 20 bytes packet length, 5.2 kHz deviation, 58 kHz digital channel filter bandwidth)					
Receiver sensitivity		–112		dBm	Sensitivity can be traded for current consumption by setting `MDMCFG2.DEM_DCFILT_OFF=1`. The typical current consumption is then reduced from 17.7 mA to 15.7 mA at sensitivity limit. The sensitivity is typically reduced to -109 dBm
Saturation		–14		dBm	`FIFOTHR.CLOSE_IN_RX=0`. See more in DN010 [8]
Adjacent channel rejection ±100 kHz offset		37		dB	Desired channel 3 dB above the sensitivity limit. 100 kHz channel spacing See Figure 4 for selectivity performance at other offset frequencies
Image channel rejection		31		dB	IF frequency 152 kHz Desired channel 3 dB above the sensitivity limit

Parameter	Min	Typ	Max	Unit	Condition/Note
Blocking ±2 MHz offset ±10 MHz offset		 -50 -40		 dBm dBm	Desired channel 3 dB above the sensitivity limit See Figure 4 for blocking performance at other offset frequencies
38.4 kBaud data rate, sensitivity optimized, `MDMCFG2.DEM_DCFILT_OFF=0` (GFSK, 1% packet error rate, 20 bytes packet length, 20 kHz deviation, 100 kHz digital channel filter bandwidth)					
Receiver sensitivity		–104		dBm	Sensitivity can be traded for current consumption by setting `MDMCFG2.DEM_DCFILT_OFF=1`. The typical current consumption is then reduced from 17.7 mA to 15.6 mA at the sensitivity limit. The sensitivity is typically reduced to -102 dBm
Saturation		–16		dBm	`FIFOTHR.CLOSE_IN_RX=0`. See more in DN010 [8]
Adjacent channel rejection -200 kHz offset +200 kHz offset		 12 25		 dB dB	Desired channel 3 dB above the sensitivity limit. 200 kHz channel spacing See Figure 5 for blocking performance at other offset frequencies
Image channel rejection		23		dB	IF frequency 152 kHz Desired channel 3 dB above the sensitivity limit
Blocking ±2 MHz offset ±10 MHz offset		 -50 -40		 dBm dBm	Desired channel 3 dB above the sensitivity limit See Figure 5 for blocking performance at other offset frequencies
250 kBaud data rate, sensitivity optimized, `MDMCFG2.DEM_DCFILT_OFF=0` (GFSK, 1% packet error rate, 20 bytes packet length, 127 kHz deviation, 540 kHz digital channel filter bandwidth)					
Receiver sensitivity		–95		dBm	Sensitivity can be traded for current consumption by setting `MDMCFG2.DEM_DCFILT_OFF=1`. The typical current consumption is then reduced from 18.9 mA to 16.9 mA at the sensitivity limit. The sensitivity is typically reduced to -91 dBm
Saturation		–17		dBm	`FIFOTHR.CLOSE_IN_RX=0`. See more in DN010 [8]
Adjacent channel rejection		25		dB	Desired channel 3 dB above the sensitivity limit. 750 kHz channel spacing See Figure 6 for blocking performance at other offset frequencies
Image channel rejection		14		dB	IF frequency 304 kHz Desired channel 3 dB above the sensitivity limit
Blocking ±2 MHz offset ±10 MHz offset		 -50 -40		 dBm dBm	Desired channel 3 dB above the sensitivity limit See Figure 6 for blocking performance at other offset frequencies
500 kBaud data rate, sensitivity optimized, `MDMCFG2.DEM_DCFILT_OFF=0` (MSK, 1% packet error rate, 20 bytes packet length, 812 kHz digital channel filter bandwidth)					
Receiver sensitivity		–90		dBm	`MDMCFG2.DEM_DCFILT_OFF=1` cannot be used for data rates > 250 kBaud
Image channel rejection		1		dB	IF frequency 355 kHz Desired channel 3 dB above the sensitivity limit
Blocking ±2 MHz offset ±10 MHz offset		 -50 -40		 dBm dBm	Desired channel 3 dB above the sensitivity limit See Figure 7 for blocking performance at other offset frequencies
4-FSK, 125 kBaud data rate (250 kbps), sensitivity optimized, `MDMCFG2.DEM_DCFILT_OFF=0` (1% packet error rate, 20 bytes packet length, 127 kHz deviation, 406 kHz digital channel filter bandwidth)					
Receiver sensitivity		-96		dBm	
4-FSK, 250 kBaud data rate (500 kbps), sensitivity optimized, `MDMCFG2.DEM_DCFILT_OFF=0` (1% packet error rate, 20 bytes packet length, 254 kHz deviation, 812 kHz digital channel filter bandwidth)					
Receiver sensitivity		-91		dBm	
4-FSK, 300 kBaud data rate (600 kbps), sensitivity optimized, `MDMCFG2.DEM_DCFILT_OFF=0` (1% packet error rate, 20 bytes packet length, 228 kHz deviation, 812 kHz digital channel filter bandwidth)					
Receiver sensitivity		-89		dBm	

Table 7: RF Receive Section

	Supply Voltage VDD = 1.8 V			Supply Voltage VDD = 3.0 V			Supply Voltage VDD = 3.6 V		
Temperature [°C]	-40	25	85	-40	25	85	-40	25	85
Sensitivity [dBm] 1.2 kBaud	-113	-112	-110	-113	-112	-110	-113	-112	-110
Sensitivity [dBm] 38.4 kBaud	-105	-104	-102	-105	-104	-102	-105	-104	-102
Sensitivity [dBm] 250 kBaud	-97	-96	-92	-97	-95	-92	-97	-94	-92
Sensitivity [dBm] 500 kBaud	-91	-90	-86	-91	-90	-86	-91	-90	-86

Table 8: Typical Sensitivity over Temperature and Supply Voltage, 868 MHz, Sensitivity Optimized Setting

	Supply Voltage VDD = 1.8 V			Supply Voltage VDD = 3.0 V			Supply Voltage VDD = 3.6 V		
Temperature [°C]	-40	25	85	-40	25	85	-40	25	85
Sensitivity [dBm] 1.2 kBaud	-113	-112	-110	-113	-112	-110	-113	-112	-110
Sensitivity [dBm] 38.4 kBaud	-105	-104	-102	-104	-104	-102	-105	-104	-102
Sensitivity [dBm] 250 kBaud	-97	-94	-92	-97	-95	-92	-97	-95	-92
Sensitivity [dBm] 500 kBaud	-91	-89	-86	-91	-90	-86	-91	-89	-86

Table 9: Typical Sensitivity over Temperature and Supply Voltage, 915 MHz, Sensitivity Optimized Setting

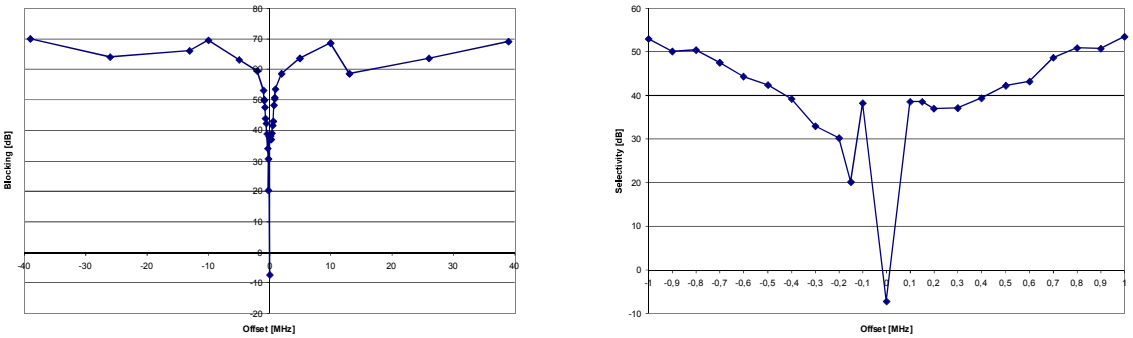

Figure 4: Typical Selectivity at 1.2 kBaud Data Rate, 868.3 MHz, GFSK, 5.2 kHz Deviation. IF Frequency is 152.3 kHz and the Digital Channel Filter Bandwidth is 58 kHz

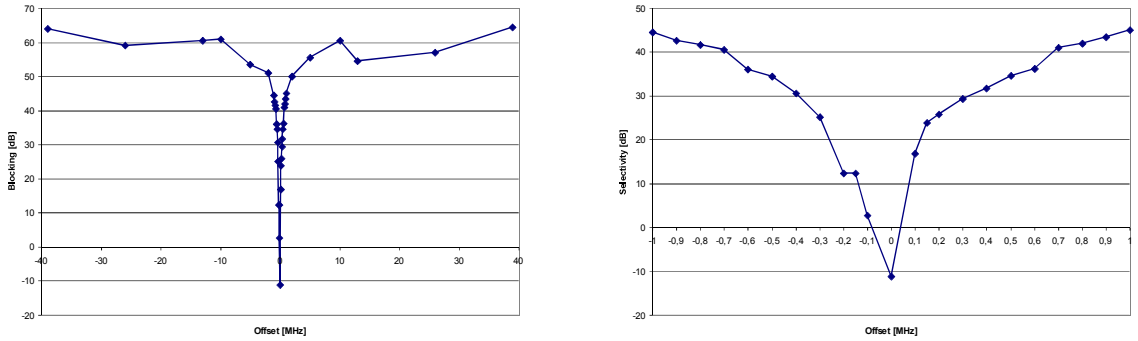

Figure 5: Typical Selectivity at 38.4 kBaud Data Rate, 868 MHz, GFSK, 20 kHz Deviation. IF Frequency is 152.3 kHz and the Digital Channel Filter Bandwidth is 100 kHz

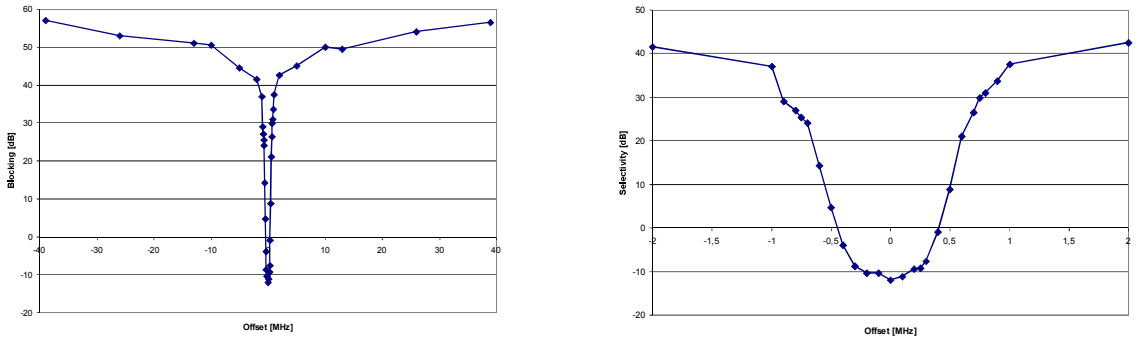

Figure 6: Typical Selectivity at 250 kBaud Data Rate, 868 MHz, GFSK, IF Frequency is 304 kHz and the Digital Channel Filter Bandwidth is 540 kHz

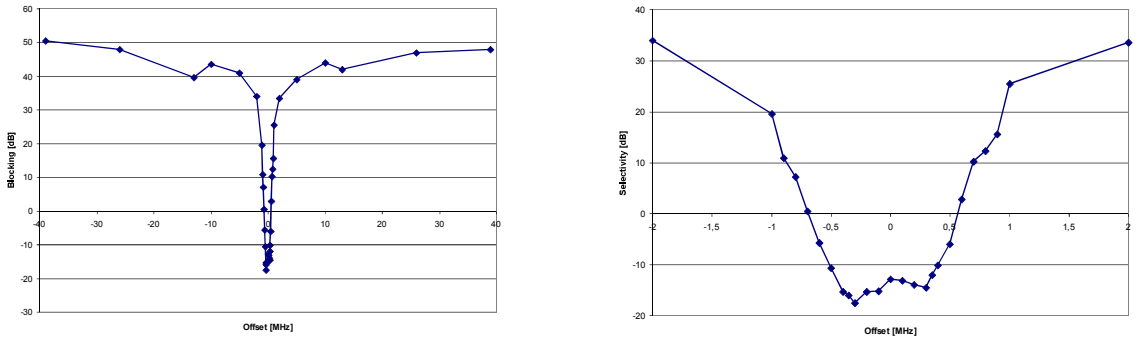

Figure 7: Typical Selectivity at 500 kBaud Data Rate, 868 MHz, GFSK, IF Frequency is 355 kHz and the Digital Channel Filter Bandwidth is 812 kHz

4.3 RF Transmit Section

T_A = 25°C, VDD = 3.0 V, +10 dBm if nothing else stated. All measurement results are obtained using the CC1101EM reference designs ([1] and [2]).

Parameter	Min	Typ	Max	Unit	Condition/Note
Differential load impedance 315 MHz 433 MHz 868/915 MHz		 122 + j31 116 + j41 86.5 + j43		 Ω Ω Ω	Differential impedance as seen from the RF-port (RF_P and RF_N) towards the antenna. Follow the CC1101EM reference designs ([1] and [2]) available from the TI website
Output power, highest setting 315 MHz 433 MHz 868 MHz 915 MHz		 +10 +10 +12 +11		 dBm dBm dBm dBm	Output power is programmable, and full range is available in all frequency bands. Output power may be restricted by regulatory limits. See Design Note DN013 [15] for output power and harmonics figures when using *multi-layer* inductors. The output power is then typically +10 dBm when operating at 868/915 MHz. Delivered to a 50 Ω single-ended load via CC1101EM reference designs ([1] and [2]) RF matching network
Output power, lowest setting		-30		dBm	Output power is programmable, and full range is available in all frequency bands Delivered to a 50Ω single-ended load via CC1101EM reference designs ([1] and [2]) RF matching network
Harmonics, radiated 2nd Harm, 433 MHz 3rd Harm, 433 MHz 2nd Harm, 868 MHz 3rd Harm, 868 MHz 2nd Harm, 915 MHz 3rd Harm, 915 MHz		 -49 -40 -47 -55 -50 -54		 dBm dBm dBm dBm dBm dBm	Measured on CC1101EM reference designs ([1] and [2]) with CW, maximum output power The antennas used during the radiated measurements (SMAFF-433 from R.W. Badland and Nearson S331 868/915) play a part in attenuating the harmonics Note: All harmonics are below -41.2 dBm when operating in the 902 – 928 MHz band
Harmonics, conducted 315 MHz 433 MHz 868 MHz 2nd Harm other harmonics 915 MHz 2nd Harm other harmonics		 < -35 < -53 -43 < -45 -36 < -46 -34 < -50		 dBm dBm dBm dBm dBm dBm dBm dBm	Measured with +10 dBm CW at 315 MHz and 433 MHz Frequencies below 960 MHz Frequencies above 960 MHz Frequencies below 1 GHz Frequencies above 1 GHz Measured with +12 dBm CW at 868 MHz Measured with +11 dBm CW at 915 MHz (requirement is -20 dBc under FCC 15.247)

Parameter	Min	Typ	Max	Unit	Condition/Note
Spurious emissions conducted, harmonics not included					
					Measured with +10 dBm CW at 315 MHz and 433 MHz
315 MHz		< -58		dBm	Frequencies below 960 MHz
		< -53		dBm	Frequencies above 960 MHz
433 MHz		< -50		dBm	Frequencies below 1 GHz
		< -54		dBm	Frequencies above 1 GHz
		< -56		dBm	Frequencies within 47-74, 87.5-118, 174-230, 470-862 MHz
					Measured with +12 dBm CW at 868 MHz
868 MHz		< -50		dBm	Frequencies below 1 GHz
		< -52		dBm	Frequencies above 1 GHz
		< -53		dBm	Frequencies within 47-74, 87.5-118, 174-230, 470-862 MHz
					All radiated spurious emissions are within the limits of ETSI. The peak conducted spurious emission is -53 dBm at 699 MHz (868 MHz – 169 MHz), which is in a frequency band limited to -54 dBm by EN 300 220. An alternative filter can be used to reduce the emission at 699 MHz below -54 dBm, for conducted measurements, and is shown in Figure 11. See more information in DN017 [9].
					For compliance with modulation bandwidth requirements under EN 300 220 in the 863 to 870 MHz frequency range it is recommended to use a 26 MHz crystal for frequencies below 869 MHz and a 27 MHz crystal for frequencies above 869 MHz.
					Measured with +11 dBm CW at 915 MHz
915 MHz		< -51		dBm	Frequencies below 960 MHz
		< -54		dBm	Frequencies above 960 MHz
TX latency		8		bit	Serial operation. Time from sampling the data on the transmitter data input pin until it is observed on the RF output ports

Table 10: RF Transmit Section

	Supply Voltage VDD = 1.8 V			Supply Voltage VDD = 3.0 V			Supply Voltage VDD = 3.6 V		
Temperature [°C]	-40	25	85	-40	25	85	-40	25	85
Output Power [dBm], PATABLE=0xC0, +12 dBm	12	11	10	12	12	11	12	12	11
Output Power [dBm], PATABLE=0xC5, +10 dBm	11	10	9	11	10	10	11	10	10
Output Power [dBm], PATABLE=0x50, 0 dBm	1	0	-1	2	1	0	2	1	0

Table 11: Typical Variation in Output Power over Temperature and Supply Voltage, 868 MHz

	Supply Voltage VDD = 1.8 V			Supply Voltage VDD = 3.0 V			Supply Voltage VDD = 3.6 V		
Temperature [°C]	-40	25	85	-40	25	85	-40	25	85
Output Power [dBm], PATABLE=0xC0, +11 dBm	11	10	10	12	11	11	12	11	11
Output Power [dBm], PATABLE=0x8E, +0 dBm	2	1	0	2	1	0	2	1	0

Table 12: Typical Variation in Output Power over Temperature and Supply Voltage, 915 MHz

4.4 Crystal Oscillator

T_A = 25°C, VDD = 3.0 V if nothing else is stated. All measurement results obtained using the CC1101EM reference designs ([1] and [2]).

Parameter	Min	Typ	Max	Unit	Condition/Note
Crystal frequency	26	26	27	MHz	For compliance with modulation bandwidth requirements under EN 300 220 in the 863 to 870 MHz frequency range it is recommended to use a 26 MHz crystal for frequencies below 869 MHz and a 27 MHz crystal for frequencies above 869 MHz.
Tolerance		±40		ppm	This is the total tolerance including a) initial tolerance, b) crystal loading, c) aging, and d) temperature dependence. The acceptable crystal tolerance depends on RF frequency and channel spacing / bandwidth.
Load capacitance	10	13	20	pF	Simulated over operating conditions
ESR			100	Ω	
Start-up time		150		µs	This parameter is to a large degree crystal dependent. Measured on the CC1101EM reference designs ([1] and [2]) using crystal AT-41CD2 from NDK

Table 13: Crystal Oscillator Parameters

4.5 Low Power RC Oscillator

T_A = 25°C, VDD = 3.0 V if nothing else is stated. All measurement results obtained using the CC1101EM reference designs ([1] and [2]).

Parameter	Min	Typ	Max	Unit	Condition/Note
Calibrated frequency	34.7	34.7	36	kHz	Calibrated RC Oscillator frequency is XTAL frequency divided by 750
Frequency accuracy after calibration			±1	%	
Temperature coefficient		+0.5		% / °C	Frequency drift when temperature changes after calibration
Supply voltage coefficient		+3		% / V	Frequency drift when supply voltage changes after calibration
Initial calibration time		2		ms	When the RC Oscillator is enabled, calibration is continuously done in the background as long as the crystal oscillator is running

Table 14: RC Oscillator Parameters

4.6 Frequency Synthesizer Characteristics

T_A = 25°C, VDD = 3.0 V if nothing else is stated. All measurement results are obtained using the CC1101EM reference designs ([1] and [2]). Min figures are given using a 27 MHz crystal. Typ and max figures are given using a 26 MHz crystal.

Parameter	Min	Typ	Max	Unit	Condition/Note
Programmed frequency resolution	397	$F_{XOSC}/2^{16}$	412	Hz	26-27 MHz crystal. The resolution (in Hz) is equal for all frequency bands
Synthesizer frequency tolerance		±40		ppm	Given by crystal used. Required accuracy (including temperature and aging) depends on frequency band and channel bandwidth / spacing
RF carrier phase noise		–92		dBc/Hz	@ 50 kHz offset from carrier
RF carrier phase noise		–92		dBc/Hz	@ 100 kHz offset from carrier
RF carrier phase noise		–92		dBc/Hz	@ 200 kHz offset from carrier
RF carrier phase noise		–98		dBc/Hz	@ 500 kHz offset from carrier
RF carrier phase noise		–107		dBc/Hz	@ 1 MHz offset from carrier
RF carrier phase noise		–113		dBc/Hz	@ 2 MHz offset from carrier
RF carrier phase noise		–119		dBc/Hz	@ 5 MHz offset from carrier
RF carrier phase noise		–129		dBc/Hz	@ 10 MHz offset from carrier
PLL turn-on / hop time (See Table 34)	72	75	75	µs	Time from leaving the IDLE state until arriving in the RX, FSTXON or TX state, when not performing calibration. Crystal oscillator running.
PLL RX/TX settling time (See Table 34)	29	30	30	µs	Settling time for the 1·IF frequency step from RX to TX
PLL TX/RX settling time (See Table 34)	30	31	31	µs	Settling time for the 1·IF frequency step from TX to RX. 250 kbps data rate.
PLL calibration time (See Table 35)	685	712	724	µs	Calibration can be initiated manually or automatically before entering or after leaving RX/TX

Table 15: Frequency Synthesizer Parameters

4.7 Analog Temperature Sensor

T_A = 25°C, VDD = 3.0 V if nothing else is stated. All measurement results obtained using the CC1101EM reference designs ([1] and [2]). Note that it is necessary to write 0xBF to the `PTEST` register to use the analog temperature sensor in the IDLE state.

Parameter	Min	Typ	Max	Unit	Condition/Note
Output voltage at –40°C		0.651		V	
Output voltage at 0°C		0.747		V	
Output voltage at +40°C		0.847		V	
Output voltage at +80°C		0.945		V	
Temperature coefficient		2.47		mV/°C	Fitted from –20 °C to +80 °C
Error in calculated temperature, calibrated	-2 *	0	2 *	°C	From –20 °C to +80 °C when using 2.47 mV / °C, after 1-point calibration at room temperature * The indicated minimum and maximum error with 1-point calibration is based on simulated values for typical process parameters
Current consumption increase when enabled		0.3		mA	

Table 16: Analog Temperature Sensor Parameters

4.8 DC Characteristics

T_A = 25°C if nothing else stated.

Digital Inputs/Outputs	Min	Max	Unit	Condition
Logic "0" input voltage	0	0.7	V	
Logic "1" input voltage	VDD-0.7	VDD	V	
Logic "0" output voltage	0	0.5	V	For up to 4 mA output current
Logic "1" output voltage	VDD-0.3	VDD	V	For up to 4 mA output current
Logic "0" input current	N/A	–50	nA	Input equals 0V
Logic "1" input current	N/A	50	nA	Input equals VDD

Table 17: DC Characteristics

4.9 Power-On Reset

For proper Power-On-Reset functionality the power supply should comply with the requirements in Table 18 below. Otherwise, the chip should be assumed to have unknown state until transmitting an `SRES` strobe over the SPI interface. See Section 19.1 on page 50 for further details.

Parameter	Min	Typ	Max	Unit	Condition/Note
Power-up ramp-up time			5	ms	From 0V until reaching 1.8V
Power off time	1			ms	Minimum time between power-on and power-off

Table 18: Power-On Reset Requirements

5 Pin Configuration

The *CC1101* pin-out is shown in Figure 8 and Table 19. See Section 26 for details on the I/O configuration.

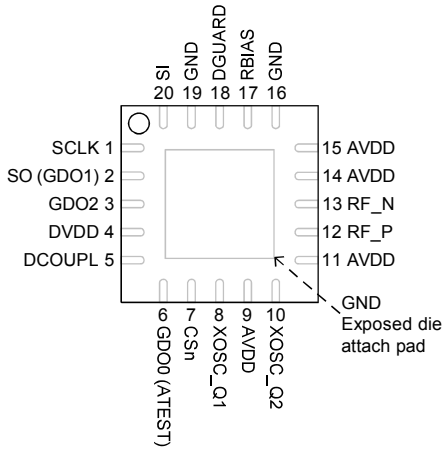

Figure 8: Pinout Top View

Note: The exposed die attach pad **must** be connected to a solid ground plane as this is the main ground connection for the chip

Pin #	Pin Name	Pin type	Description
1	SCLK	Digital Input	Serial configuration interface, clock input
2	SO (GDO1)	Digital Output	Serial configuration interface, data output Optional general output pin when CSn is high
3	GDO2	Digital Output	Digital output pin for general use: • Test signals • FIFO status signals • Clear channel indicator • Clock output, down-divided from XOSC • Serial output RX data
4	DVDD	Power (Digital)	1.8 - 3.6 V digital power supply for digital I/O's and for the digital core voltage regulator
5	DCOUPL	Power (Digital)	1.6 - 2.0 V digital power supply output for decoupling **NOTE:** This pin is intended for use with the *CC1101* only. It can not be used to provide supply voltage to other devices
6	GDO0 (ATEST)	Digital I/O	Digital output pin for general use: • Test signals • FIFO status signals • Clear channel indicator • Clock output, down-divided from XOSC • Serial output RX data • Serial input TX data Also used as analog test I/O for prototype/production testing
7	CSn	Digital Input	Serial configuration interface, chip select
8	XOSC_Q1	Analog I/O	Crystal oscillator pin 1, or external clock input
9	AVDD	Power (Analog)	1.8 - 3.6 V analog power supply connection
10	XOSC_Q2	Analog I/O	Crystal oscillator pin 2
11	AVDD	Power (Analog)	1.8 - 3.6 V analog power supply connection
12	RF_P	RF I/O	Positive RF input signal to LNA in receive mode Positive RF output signal from PA in transmit mode
13	RF_N	RF I/O	Negative RF input signal to LNA in receive mode Negative RF output signal from PA in transmit mode
14	AVDD	Power (Analog)	1.8 - 3.6 V analog power supply connection
15	AVDD	Power (Analog)	1.8 - 3.6 V analog power supply connection
16	GND	Ground (Analog)	Analog ground connection
17	RBIAS	Analog I/O	External bias resistor for reference current
18	DGUARD	Power (Digital)	Power supply connection for digital noise isolation
19	GND	Ground (Digital)	Ground connection for digital noise isolation
20	SI	Digital Input	Serial configuration interface, data input

Table 19: Pinout Overview

6 Circuit Description

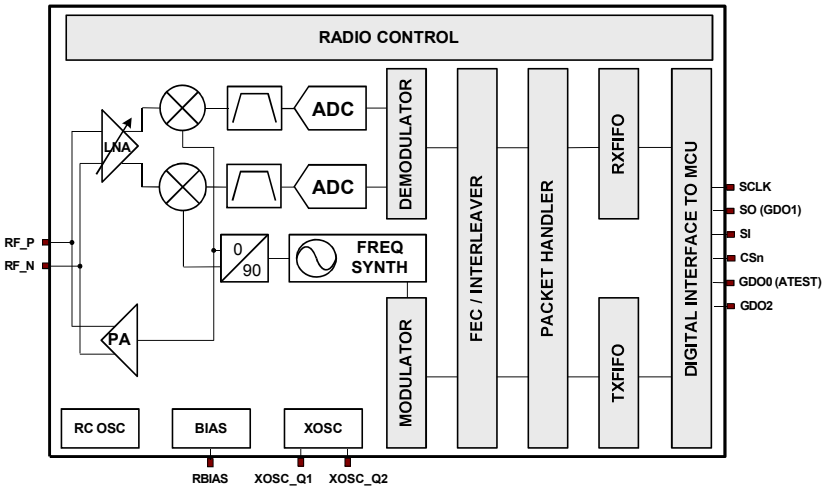

Figure 9: CC1101 Simplified Block Diagram

A simplified block diagram of CC1101 is shown in Figure 9.

CC1101 features a low-IF receiver. The received RF signal is amplified by the low-noise amplifier (LNA) and down-converted in quadrature (I and Q) to the intermediate frequency (IF). At IF, the I/Q signals are digitised by the ADCs. Automatic gain control (AGC), fine channel filtering, demodulation, and bit/packet synchronization are performed digitally.

The transmitter part of CC1101 is based on direct synthesis of the RF frequency. The frequency synthesizer includes a completely on-chip LC VCO and a 90 degree phase shifter for generating the I and Q LO signals to the down-conversion mixers in receive mode.

A crystal is to be connected to XOSC_Q1 and XOSC_Q2. The crystal oscillator generates the reference frequency for the synthesizer, as well as clocks for the ADC and the digital part.

A 4-wire SPI serial interface is used for configuration and data buffer access.

The digital baseband includes support for channel configuration, packet handling, and data buffering.

7 Application Circuit

Only a few external components are required for using the CC1101. The recommended application circuits for CC1101 are shown in Figure 10 and

Figure 11. The external components are described in Table 20, and typical values are given in Table 21.

The 315 MHz and 433 MHz CC1101EM reference design [1] use inexpensive multi-layer inductors. The 868 MHz and 915 MHz CC1101EM reference design [2] use wire-wound inductors as this give better output power, sensitivity, and attenuation of harmonics compared to using multi-layer inductors. Refer to design note DN032 [24] for information about performance when using wire-wound inductors from different vendors. See also Design Note DN013 [15], which gives the output power and harmonics when using *multi-layer* inductors. The output power is then typically +10 dBm when operating at 868/915 MHz.

7.1 Bias Resistor

The bias resistor R171 is used to set an accurate bias current.

7.2 Balun and RF Matching

The balanced RF input and output of CC1101 share two common pins and are designed for a simple, low-cost matching and balun network on the printed circuit board. The receive- and transmit switching at the CC1101 front-end is controlled by a dedicated on-chip function, eliminating the need for an external RX/TX-switch.

A few external passive components combined with the internal RX/TX switch/termination circuitry ensures match in both RX and TX mode. The components between the RF_N/RF_P pins and the point where the two signals are joined together (C131, C121, L121 and L131 for the 315/433 MHz reference design [1], and L121, L131, C121, L122, C131, C122 and L132 for the 868/915 MHz reference design [2]) form a balun that converts the differential RF signal on CC1101 to a single-ended RF signal. C124 is needed for DC blocking. Together with an appropriate LC network, the balun components also transform the impedance to match a 50 Ω load. C125 provides DC blocking and is only needed if there is a DC path in the antenna. For the 868/915 MHz reference design, this component may also be used for additional filtering, see Section 7.5 below.

Suggested values for 315 MHz, 433 MHz, and 868/915 MHz are listed in Table 21.

The balun and LC filter component values and their placement are important to keep the performance optimized. It is highly recommended to follow the CC1101EM reference design ([1] and [2]). Gerber files and schematics for the reference designs are available for download from the TI website.

7.3 Crystal

A crystal in the frequency range 26-27 MHz must be connected between the XOSC_Q1 and XOSC_Q2 pins. The oscillator is designed for parallel mode operation of the crystal. In addition, loading capacitors (C81 and C101) for the crystal are required. The loading capacitor values depend on the total load capacitance, C_L, specified for the crystal. The total load capacitance seen between the crystal terminals should equal C_L for the crystal to oscillate at the specified frequency.

$$C_L = \frac{1}{\frac{1}{C_{81}} + \frac{1}{C_{101}}} + C_{parasitic}$$

The parasitic capacitance is constituted by pin input capacitance and PCB stray capacitance. Total parasitic capacitance is typically 2.5 pF.

The crystal oscillator is amplitude regulated. This means that a high current is used to start up the oscillations. When the amplitude builds up, the current is reduced to what is necessary to maintain approximately 0.4 Vpp signal swing. This ensures a fast start-up, and keeps the drive level to a minimum. The ESR of the crystal should be within the specification in order to ensure a reliable start-up (see Section 4.4).

The initial tolerance, temperature drift, aging and load pulling should be carefully specified in order to meet the required frequency accuracy in a certain application.

Avoid routing digital signals with sharp edges close to XOSC_Q1 PCB track or underneath the crystal Q1 pad as this may shift the crystal dc operating point and result in duty cycle variation.

For compliance with modulation bandwidth requirements under EN 300 220 in the 863 to 870 MHz frequency range it is recommended to use a 26 MHz crystal for frequencies below 869 MHz and a 27 MHz crystal for frequencies above 869 MHz.

7.4 Reference Signal

The chip can alternatively be operated with a reference signal from 26 to 27 MHz instead of a crystal. This input clock can either be a full-swing digital signal (0 V to VDD) or a sine wave of maximum 1 V peak-peak amplitude. The reference signal must be connected to the XOSC_Q1 input. The sine wave must be connected to XOSC_Q1 using a serial capacitor. When using a full-swing digital signal, this capacitor can be omitted. The XOSC_Q2 line must be left un-connected. C81

and C101 can be omitted when using a reference signal.

7.5 Additional Filtering

In the 868/915 MHz reference design, C126 and L125 together with C125 build an optional filter to reduce emission at carrier frequency – 169 MHz. This filter is necessary for applications with an external antenna connector that seek compliance with ETSI EN 300-220. For more information, see DN017 [9].

If this filtering is not necessary, C125 will work as a DC block (only necessary if there is a DC path in the antenna). C126 and L125 should in that case be left unmounted.

Additional external components (e.g. an RF SAW filter) may be used in order to improve the performance in specific applications.

7.6 Power Supply Decoupling

The power supply must be properly decoupled close to the supply pins. Note that decoupling capacitors are not shown in the application circuit. The placement and the size of the decoupling capacitors are very important to achieve the optimum performance. The CC1101EM reference designs ([1] and [2]) should be followed closely.

7.7 Antenna Considerations

The reference design ([1] and [2]) contains a SMA connector and is matched for a 50 Ω load. The SMA connector makes it easy to connect evaluation modules and prototypes to different test equipment for example a spectrum analyzer. The SMA connector can also be replaced by an antenna suitable for the desired application. Please refer to the antenna selection guide [13] for further details regarding antenna solutions provided by TI.

Component	Description
C51	Decoupling capacitor for on-chip voltage regulator to digital part
C81/C101	Crystal loading capacitors
C121/C131	RF balun/matching capacitors
C122	RF LC filter/matching filter capacitor (315/433 MHz). RF balun/matching capacitor (868/915 MHz).
C123	RF LC filter/matching capacitor
C124	RF balun DC blocking capacitor
C125	RF LC filter DC blocking capacitor and part of optional RF LC filter (868/915 MHz)
C126	Part of optional RF LC filter and DC-block (868/915 MHz)
L121/L131	RF balun/matching inductors (inexpensive multi-layer type)
L122	RF LC filter/matching filter inductor (315 and 433 MHz). RF balun/matching inductor (868/915 MHz). (inexpensive multi-layer type)
L123	RF LC filter/matching filter inductor (inexpensive multi-layer type)
L124	RF LC filter/matching filter inductor (inexpensive multi-layer type)
L125	Optional RF LC filter/matching filter inductor (inexpensive multi-layer type) (868/915 MHz)
L132	RF balun/matching inductor. (inexpensive multi-layer type)
R171	Resistor for internal bias current reference
XTAL	26 – 27 MHz crystal

Table 20: Overview of External Components (excluding supply decoupling capacitors)

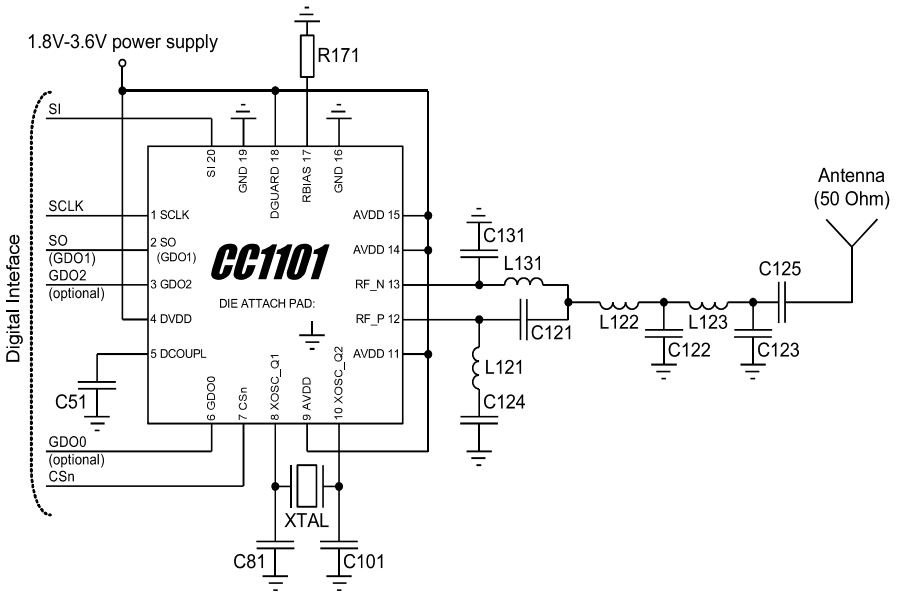

Figure 10: Typical Application and Evaluation Circuit 315/433 MHz (excluding supply decoupling capacitors)

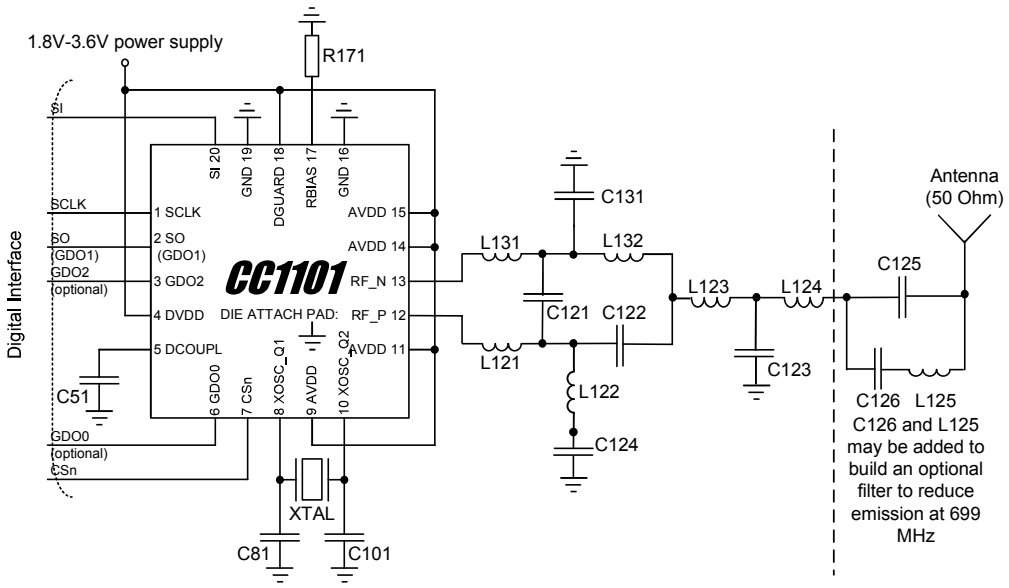

Figure 11: Typical Application and Evaluation Circuit 868/915 MHz (excluding supply decoupling capacitors)

Component	Value at 315MHz	Value at 433MHz	Value at 868/915MHz	Manufacturer
C51	100 nF ± 10%, 0402 X5R			Murata GRM1555C series
C81	27 pF ± 5%, 0402 NP0			Murata GRM1555C series
C101	27 pF ± 5%, 0402 NP0			Murata GRM1555C series
C121	6.8 pF ± 0.5 pF, 0402 NP0	3.9 pF ± 0.25 pF, 0402 NP0	1.0 pF ± 0.25 pF, 0402 NP0	Murata GRM1555C series
C122	12 pF ± 5%, 0402 NP0	8.2 pF ± 0.5 pF, 0402 NP0	1.5 pF ± 0.25 pF, 0402 NP0	Murata GRM1555C series
C123	6.8 pF ± 0.5 pF, 0402 NP0	5.6 pF ± 0.5 pF, 0402 NP0	3.3 pF ± 0.25 pF, 0402 NP0	Murata GRM1555C series
C124	220 pF ± 5%, 0402 NP0	220 pF ± 5%, 0402 NP0	100 pF ± 5%, 0402 NP0	Murata GRM1555C series
C125	220 pF ± 5%, 0402 NP0	220 pF ± 5%, 0402 NP0	12 pF ± 5%, 0402 NP0	Murata GRM1555C series
C126			47 pF ± 5%, 0402 NP0	Murata GRM1555C series
C131	6.8 pF ± 0.5 pF, 0402 NP0	3.9 pF ± 0.25 pF, 0402 NP0	1.5 pF ± 0.25 pF, 0402 NP0	Murata GRM1555C series
L121	33 nH ± 5%, 0402 monolithic	27 nH ± 5%, 0402 monolithic	12 nH ± 5%, 0402 monolithic	Murata LQG15HS series (315/433 MHz) Murata LQW15xx series (868/915 MHz)
L122	18 nH ± 5%, 0402 monolithic	22 nH ± 5%, 0402 monolithic	18 nH ± 5%, 0402 monolithic	Murata LQG15HS series (315/433 MHz) Murata LQW15xx series (868/915 MHz)
L123	33 nH ± 5%, 0402 monolithic	27 nH ± 5%, 0402 monolithic	12 nH ± 5%, 0402 monolithic	Murata LQG15HS series (315/433 MHz) Murata LQW15xx series (868/915 MHz)
L124			12 nH ± 5%, 0402 monolithic	Murata LQG15HS series (315/433 MHz) Murata LQW15xx series (868/915 MHz)
L125			3.3 nH ± 5%, 0402 monolithic	Murata LQG15HS series (315/433 MHz) Murata LQW15xx series (868/915 MHz)
L131	33 nH ± 5%, 0402 monolithic	27 nH ± 5%, 0402 monolithic	12 nH ± 5%, 0402 monolithic	Murata LQG15HS series (315/433 MHz) Murata LQW15xx series (868/915 MHz)
L132			18 nH ± 5%, 0402 monolithic	Murata LQG15HS series (315/433 MHz) Murata LQW15xx series (868/915 MHz)
R171	56 kΩ ± 1%, 0402	Koa RK73 series		
XTAL	26.0 MHz surface mount crystal			NDK, NX3225GA or AT-41CD2

Table 21: Bill Of Materials for the Application Circuit[1]

[1] Refer to design note DN032 [24] for information about performance when using inductors from other vendors than Murata.

7.8 PCB Layout Recommendations

The top layer should be used for signal routing, and the open areas should be filled with metallization connected to ground using several vias.

The area under the chip is used for grounding and shall be connected to the bottom ground plane with several vias for good thermal performance and sufficiently low inductance to ground.

In the CC1101EM reference designs ([1] and [2]), 5 vias are placed inside the exposed die attached pad. These vias should be “tented” (covered with solder mask) on the component side of the PCB to avoid migration of solder through the vias during the solder reflow process.

The solder paste coverage should not be 100%. If it is, out gassing may occur during the

reflow process, which may cause defects (splattering, solder balling). Using "tented" vias reduces the solder paste coverage below 100%. See Figure 12 for top solder resist and top paste masks.

Each decoupling capacitor should be placed as close as possible to the supply pin it is supposed to decouple. Each decoupling capacitor should be connected to the power line (or power plane) by separate vias. The best routing is from the power line (or power plane) to the decoupling capacitor and then to the CC1101 supply pin. Supply power filtering is very important.

Each decoupling capacitor ground pad should be connected to the ground plane by separate vias. Direct connections between neighboring power pins will increase noise coupling and should be avoided unless absolutely necessary. Routing in the ground plane underneath the chip or the balun/RF matching circuit, or between the chip's ground vias and the decoupling capacitor's ground vias should be avoided. This improves the grounding and ensures the shortest possible current return path.

Avoid routing digital signals with sharp edges close to XOSC_Q1 PCB track or underneath the crystal Q1 pad as this may shift the crystal dc operating point and result in duty cycle variation.

The external components should ideally be as small as possible (0402 is recommended) and surface mount devices are highly recommended. Please note that components with different sizes than those specified may have differing characteristics.

Precaution should be used when placing the microcontroller in order to avoid noise interfering with the RF circuitry.

A CC1101DK Development Kit with a fully assembled CC1101EM Evaluation Module is available. It is strongly advised that this reference layout is followed very closely in order to get the best performance. The schematic, BOM and layout Gerber files are all available from the TI website ([1] and [2]).

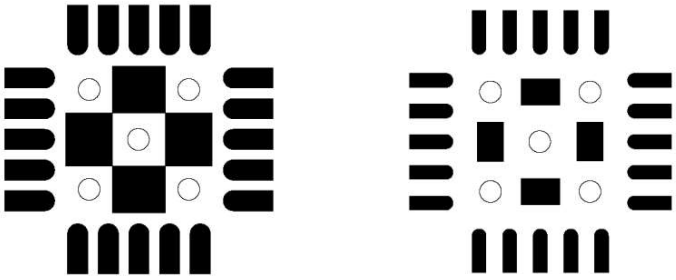

Figure 12: Left: Top Solder Resist Mask (Negative). Right: Top Paste Mask. Circles are Vias

8 Configuration Overview

CC1101 can be configured to achieve optimum performance for many different applications. Configuration is done using the SPI interface. See Section 10 below for more description of the SPI interface. The following key parameters can be programmed:

- Power-down / power up mode
- Crystal oscillator power-up / power-down
- Receive / transmit mode
- RF channel selection
- Data rate
- Modulation format
- RX channel filter bandwidth
- RF output power
- Data buffering with separate 64-byte receive and transmit FIFOs
- Packet radio hardware support
- Forward Error Correction (FEC) with interleaving
- Data whitening
- Wake-On-Radio (WOR)

Details of each configuration register can be found in Section 29, starting on page 66.

Figure 13 shows a simplified state diagram that explains the main CC1101 states together with typical usage and current consumption. For detailed information on controlling the

CC1101 state machine, and a complete state diagram, see Section 19, starting on page 50.

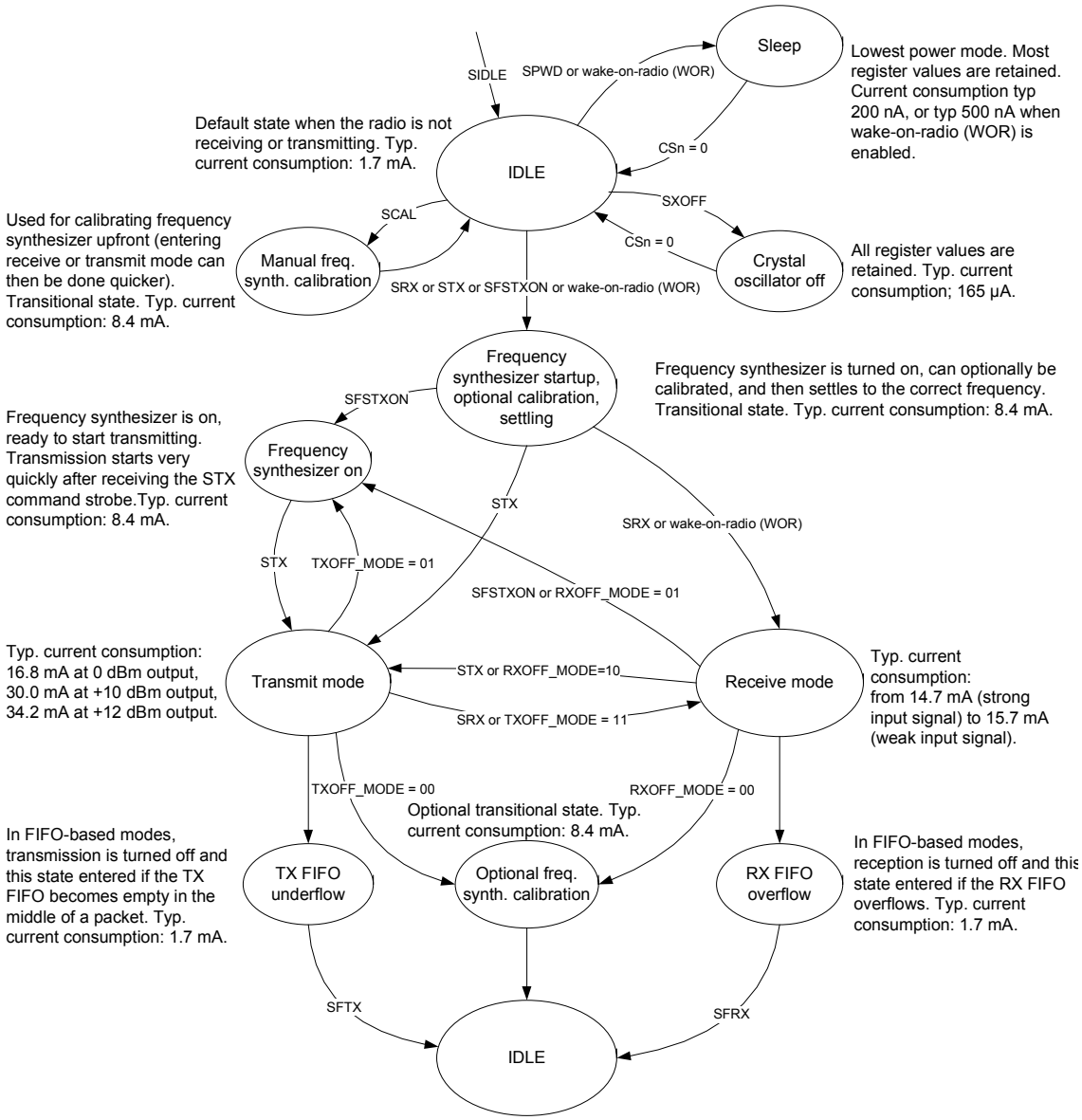

Figure 13: Simplified State Diagram, with Typical Current Consumption at 1.2 kBaud Data Rate and `MDMCFG2.DEM_DCFILT_OFF=1` (current optimized). Frequency Band = 868 MHz

9 Configuration Software

CC1101 can be configured using the SmartRF™ Studio software [5]. The SmartRF Studio software is highly recommended for obtaining optimum register settings, and for evaluating performance and functionality. A screenshot of the SmartRF Studio user interface for CC1101 is shown in Figure 14.

After chip reset, all the registers have default values as shown in the tables in Section 29. The optimum register setting might differ from the default value. After a reset all registers that shall be different from the default value therefore needs to be programmed through the SPI interface.

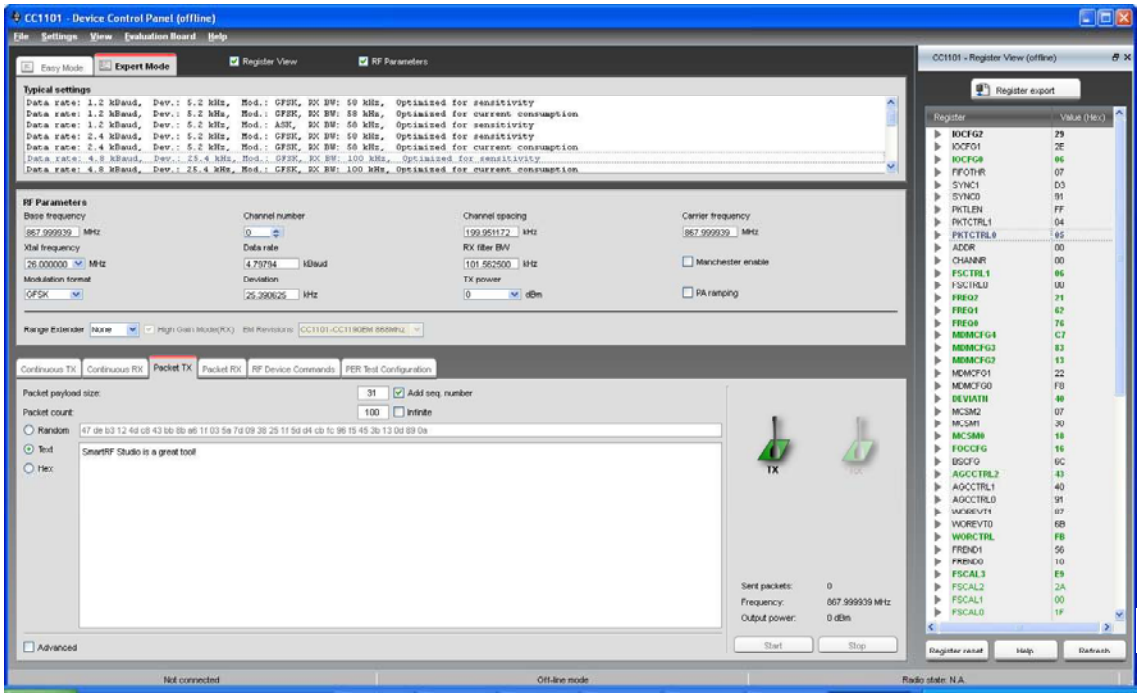

Figure 14: SmartRF™ Studio [5] User Interface

10 4-wire Serial Configuration and Data Interface

CC1101 is configured via a simple 4-wire SPI-compatible interface (SI, SO, SCLK and CSn) where CC1101 is the slave. This interface is also used to read and write buffered data. All transfers on the SPI interface are done most significant bit first.

All transactions on the SPI interface start with a header byte containing a R/$\overline{W}$ bit, a burst access bit (B), and a 6-bit address ($A_5 – A_0$).

The CSn pin must be kept low during transfers on the SPI bus. If CSn goes high during the transfer of a header byte or during read/write from/to a register, the transfer will be cancelled. The timing for the address and data transfer on the SPI interface is shown in Figure 15 with reference to Table 22.

When CSn is pulled low, the MCU must wait until CC1101 SO pin goes low before starting to transfer the header byte. This indicates that the crystal is running. Unless the chip was in the SLEEP or XOFF states, the SO pin will always go low immediately after taking CSn low.

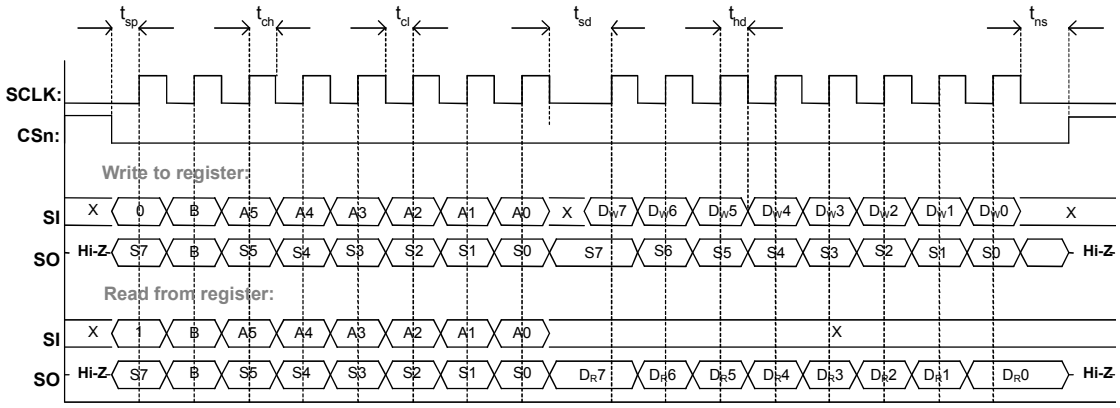

Figure 15: Configuration Registers Write and Read Operations

Parameter	Description		Min	Max	Units
f_{SCLK}	SCLK frequency 100 ns delay inserted between address byte and data byte (single access), or between address and data, and between each data byte (burst access).		-	10	MHz
	SCLK frequency, single access No delay between address and data byte		-	9	
	SCLK frequency, burst access No delay between address and data byte, or between data bytes		-	6.5	
$t_{sp,pd}$	CSn low to positive edge on SCLK, in power-down mode		150	-	µs
t_{sp}	CSn low to positive edge on SCLK, in active mode		20	-	ns
t_{ch}	Clock high		50	-	ns
t_{cl}	Clock low		50	-	ns
t_{rise}	Clock rise time		-	40	ns
t_{fall}	Clock fall time		-	40	ns
t_{sd}	Setup data (negative SCLK edge) to positive edge on SCLK (t_{sd} applies between address and data bytes, and between data bytes)	Single access Burst access	55 76	- -	ns
t_{hd}	Hold data after positive edge on SCLK		20	-	ns
t_{ns}	Negative edge on SCLK to CSn high.		20	-	ns

Table 22: SPI Interface Timing Requirements

Note: The minimum $t_{sp,pd}$ figure in Table 22 can be used in cases where the user does not read the `CHIP_RDYn` signal. CSn low to positive edge on SCLK when the chip is woken from power-down depends on the start-up time of the crystal being used. The 150 µs in Table 22 is the crystal oscillator start-up time measured on CC1101EM reference designs ([1] and [2]) using crystal AT-41CD2 from NDK.

10.1 Chip Status Byte

When the header byte, data byte, or command strobe is sent on the SPI interface, the chip status byte is sent by the CC1101 on the SO pin. The status byte contains key status signals, useful for the MCU. The first bit, s7, is the CHIP_RDYn signal and this signal must go low before the first positive edge of SCLK. The CHIP_RDYn signal indicates that the crystal is running.

Bits 6, 5, and 4 comprise the STATE value. This value reflects the state of the chip. The XOSC and power to the digital core are on in the IDLE state, but all other modules are in power down. The frequency and channel configuration should only be updated when the chip is in this state. The RX state will be active when the chip is in receive mode. Likewise, TX is active when the chip is transmitting.

The last four bits (3:0) in the status byte contains FIFO_BYTES_AVAILABLE. For read operations (the R/$\overline{W}$ bit in the header byte is set to 1), the FIFO_BYTES_AVAILABLE field contains the number of bytes available for reading from the RX FIFO. For write operations (the R/$\overline{W}$ bit in the header byte is set to 0), the FIFO_BYTES_AVAILABLE field contains the number of bytes that can be written to the TX FIFO. When FIFO_BYTES_AVAILABLE=15, 15 or more bytes are available/free.

Table 23 gives a status byte summary.

Bits	Name	Description
7	CHIP_RDYn	Stays high until power and crystal have stabilized. Should always be low when using the SPI interface.
6:4	STATE[2:0]	Indicates the current main state machine mode
3:0	FIFO_BYTES_AVAILABLE[3:0]	The number of bytes available in the RX FIFO or free bytes in the TX FIFO

Value	State	Description
000	IDLE	IDLE state (Also reported for some transitional states instead of SETTLING or CALIBRATE)
001	RX	Receive mode
010	TX	Transmit mode
011	FSTXON	Fast TX ready
100	CALIBRATE	Frequency synthesizer calibration is running
101	SETTLING	PLL is settling
110	RXFIFO_OVERFLOW	RX FIFO has overflowed. Read out any useful data, then flush the FIFO with SFRX
111	TXFIFO_UNDERFLOW	TX FIFO has underflowed. Acknowledge with SFTX

Table 23: Status Byte Summary

10.2 Register Access

The configuration registers on the CC1101 are located on SPI addresses from 0x00 to 0x2E. Table 43 on page 68 lists all configuration registers. It is highly recommended to use SmartRF Studio [5] to generate optimum register settings. The detailed description of each register is found in Section 29.1 and 29.2, starting on page 71. All configuration registers can be both written to and read. The R/$\overline{W}$ bit controls if the register should be written to or read. When writing to registers, the status byte is sent on the SO pin each time a header byte or data byte is transmitted on the SI pin. When reading from registers, the status byte is sent on the SO pin each time a header byte is transmitted on the SI pin.

Registers with consecutive addresses can be accessed in an efficient way by setting the burst bit (B) in the header byte. The address bits (A_5 – A_0) set the start address in an internal address counter. This counter is incremented by one each new byte (every 8

clock pulses). The burst access is either a read or a write access and must be terminated by setting CSn high.

For register addresses in the range 0x30-0x3D, the burst bit is used to select between status registers when burst bit is one, and between command strobes when burst bit is zero. See more in Section 10.3 below. Because of this, burst access is not available for status registers and they must be accessed one at a time. The status registers can only be read.

10.3 SPI Read

When reading register fields over the SPI interface while the register fields are updated by the radio hardware (e.g. `MARCSTATE` or `TXBYTES`), there is a small, but finite, probability that a single read from the register is being corrupt. As an example, the probability of any single read from `TXBYTES` being corrupt, assuming the maximum data rate is used, is approximately 80 ppm. Refer to the CC1101 Errata Notes [3] for more details.

10.4 Command Strobes

Command Strobes may be viewed as single byte instructions to CC1101. By addressing a command strobe register, internal sequences will be started. These commands are used to disable the crystal oscillator, enable receive mode, enable wake-on-radio etc. The 13 command strobes are listed in Table 42 on page 67.

> **Note:** An SIDLE strobe will clear all pending command strobes until IDLE state is reached. This means that if for example an SIDLE strobe is issued while the radio is in RX state, any other command strobes issued before the radio reaches IDLE state will be ignored.

The command strobe registers are accessed by transferring a single header byte (no data is being transferred). That is, only the R/$\overline{W}$ bit, the burst access bit (set to 0), and the six address bits (in the range 0x30 through 0x3D) are written. The R/$\overline{W}$ bit can be either one or zero and will determine how the `FIFO_BYTES_AVAILABLE` field in the status byte should be interpreted.

When writing command strobes, the status byte is sent on the SO pin.

A command strobe may be followed by any other SPI access without pulling CSn high. However, if an `SRES` strobe is being issued, one will have to wait for SO to go low again before the next header byte can be issued as shown in Figure 16. The command strobes are executed immediately, with the exception of the `SPWD`, `SWOR`, and the `SXOFF` strobes, which are executed when CSn goes high.

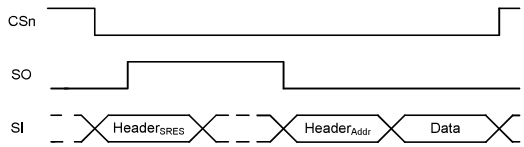

Figure 16: SRES Command Strobe

10.5 FIFO Access

The 64-byte TX FIFO and the 64-byte RX FIFO are accessed through the 0x3F address. When the R/$\overline{W}$ bit is zero, the TX FIFO is accessed, and the RX FIFO is accessed when the R/$\overline{W}$ bit is one.

The TX FIFO is write-only, while the RX FIFO is read-only.

The burst bit is used to determine if the FIFO access is a single byte access or a burst access. The single byte access method

expects a header byte with the burst bit set to zero and one data byte. After the data byte, a new header byte is expected; hence, CSn can remain low. The burst access method expects one header byte and then consecutive data bytes until terminating the access by setting CSn high.

The following header bytes access the FIFOs:

- 0x3F: Single byte access to TX FIFO
- 0x7F: Burst access to TX FIFO
- 0xBF: Single byte access to RX FIFO
- 0xFF: Burst access to RX FIFO

When writing to the TX FIFO, the status byte (see Section 10.1) is output on SO for each new data byte as shown in Figure 15. This status byte can be used to detect TX FIFO underflow while writing data to the TX FIFO. Note that the status byte contains the number of bytes free before writing the byte in progress to the TX FIFO. When the last byte that fits in the TX FIFO is transmitted on SI, the status byte received concurrently on SO will indicate that one byte is free in the TX FIFO.

The TX FIFO may be flushed by issuing a `SFTX` command strobe. Similarly, a `SFRX` command strobe will flush the RX FIFO. A `SFTX` or `SFRX` command strobe can only be issued in the IDLE, TXFIFO_UNDERFLOW, or RXFIFO_OVERFLOW states. Both FIFOs are flushed when going to the SLEEP state.

Figure 17 gives a brief overview of different register access types possible.

10.6 PATABLE Access

The 0x3E address is used to access the `PATABLE`, which is used for selecting PA power control settings. The SPI expects up to eight data bytes after receiving the address. By programming the `PATABLE`, controlled PA power ramp-up and ramp-down can be achieved, as well as ASK modulation shaping for reduced bandwidth. See SmartRF Studio [5] for recommended shaping / PA ramping sequences. See also Section 24 for details on output power programming.

The `PATABLE` is an 8-byte table that defines the PA control settings to use for each of the eight PA power values (selected by the 3-bit value `FREND0.PA_POWER`). The table is written and read from the lowest setting (0) to the highest (7), one byte at a time. An index counter is used to control the access to the table. This counter is incremented each time a byte is read or written to the table, and set to the lowest index when CSn is high. When the highest value is reached the counter restarts at zero.

The access to the `PATABLE` is either single byte or burst access depending on the burst bit. When using burst access the index counter will count up; when reaching 7 the counter will restart at 0. The R/$\overline{W}$ bit controls whether the access is a read or a write access.

If one byte is written to the `PATABLE` and this value is to be read out, CSn must be set high before the read access in order to set the index counter back to zero.

Note that the content of the `PATABLE` is lost when entering the SLEEP state, except for the first byte (index 0).

For more information, see Design Note DN501 [18].

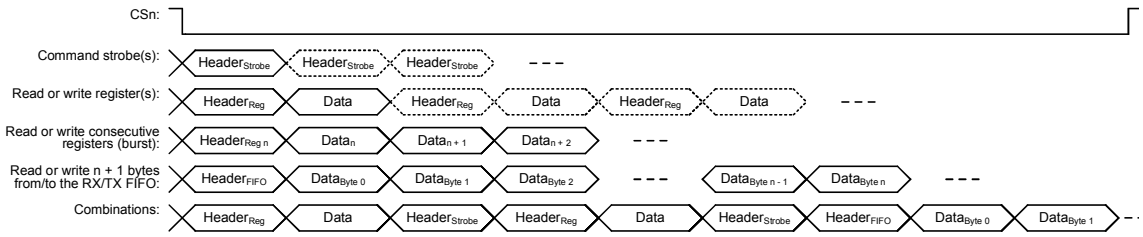

Figure 17: Register Access Types

11 Microcontroller Interface and Pin Configuration

In a typical system, CC1101 will interface to a microcontroller. This microcontroller must be able to:

- Program CC1101 into different modes
- Read and write buffered data
- Read back status information via the 4-wire SPI-bus configuration interface (SI, SO, SCLK and CSn)

11.1 Configuration Interface

The microcontroller uses four I/O pins for the SPI configuration interface (SI, SO, SCLK and CSn). The SPI is described in Section 10 on page 29.

11.2 General Control and Status Pins

The CC1101 has two dedicated configurable pins (GDO0 and GDO2) and one shared pin (GDO1) that can output internal status information useful for control software. These pins can be used to generate interrupts on the MCU. See Section 26 on page 61 for more details on the signals that can be programmed.

GDO1 is shared with the SO pin in the SPI interface. The default setting for GDO1/SO is 3-state output. By selecting any other of the programming options, the GDO1/SO pin will become a generic pin. When CSn is low, the pin will always function as a normal SO pin.

In the synchronous and asynchronous serial modes, the GDO0 pin is used as a serial TX data input pin while in transmit mode.

The GDO0 pin can also be used for an on-chip analog temperature sensor. By measuring the voltage on the GDO0 pin with an external ADC, the temperature can be calculated. Specifications for the temperature sensor are found in Section 4.7. With default `PTEST` register setting (0x7F), the temperature sensor output is only available if the frequency synthesizer is enabled (e.g. the MANCAL, FSTXON, RX, and TX states). It is necessary to write 0xBF to the `PTEST` register to use the analog temperature sensor in the IDLE state. Before leaving the IDLE state, the `PTEST` register should be restored to its default value (0x7F).

11.3 Optional Radio Control Feature

The CC1101 has an optional way of controlling the radio by reusing SI, SCLK, and CSn from the SPI interface. This feature allows for a simple three-pin control of the major states of the radio: SLEEP, IDLE, RX, and TX. This optional functionality is enabled with the `MCSM0.PIN_CTRL_EN` configuration bit.

State changes are commanded as follows:

- If CSn is high, the SI and SCLK are set to the desired state according to Table 24.
- If CSn goes low, the state of SI and SCLK is latched and a command strobe is generated internally according to the pin configuration.

It is only possible to change state with the latter functionality. That means that for instance RX will not be restarted if SI and SCLK are set to RX and CSn toggles. When CSn is low the SI and SCLK has normal SPI functionality.

All pin control command strobes are executed immediately except the `SPWD` strobe. The `SPWD` strobe is delayed until CSn goes high.

CSn	SCLK	SI	Function
1	X	X	Chip unaffected by SCLK/`SI`
↓	0	0	Generates `SPWD` strobe
↓	0	1	Generates `STX` strobe
↓	1	0	Generates `SIDLE` strobe
↓	1	1	Generates `SRX` strobe
0	SPI mode	SPI mode	SPI mode (wakes up into IDLE if in SLEEP/XOFF)

Table 24: Optional Pin Control Coding

12 Data Rate Programming

The data rate used when transmitting, or the data rate expected in receive is programmed by the MDMCFG3.DRATE_M and the MDMCFG4.DRATE_E configuration registers. The data rate is given by the formula below. As the formula shows, the programmed data rate depends on the crystal frequency.

$$R_{DATA} = \frac{(256 + DRATE_M) \cdot 2^{DRATE_E}}{2^{28}} \cdot f_{XOSC}$$

The following approach can be used to find suitable values for a given data rate:

$$DRATE_E = \left\lfloor \log_2 \left(\frac{R_{DATA} \cdot 2^{20}}{f_{XOSC}} \right) \right\rfloor$$

$$DRATE_M = \frac{R_{DATA} \cdot 2^{28}}{f_{XOSC} \cdot 2^{DRATE_E}} - 256$$

If DRATE_M is rounded to the nearest integer and becomes 256, increment DRATE_E and use DRATE_M = 0.

The data rate can be set from 0.6 kBaud to 500 kBaud with the minimum step size according to Table 25 below. See Table 3 for the minimum and maximum data rates for the different modulation formats.

Min Data Rate [kBaud]	Typical Data Rate [kBaud]	Max Data Rate [kBaud]	Data rate Step Size [kBaud]
0.6	1.0	0.79	0.0015
0.79	1.2	1.58	0.0031
1.59	2.4	3.17	0.0062
3.17	4.8	6.33	0.0124
6.35	9.6	12.7	0.0248
12.7	19.6	25.3	0.0496
25.4	38.4	50.7	0.0992
50.8	76.8	101.4	0.1984
101.6	153.6	202.8	0.3967
203.1	250	405.5	0.7935
406.3	500	500	1.5869

Table 25: Data Rate Step Size (assuming a 26 MHz crystal)

13 Receiver Channel Filter Bandwidth

In order to meet different channel width requirements, the receiver channel filter is programmable. The MDMCFG4.CHANBW_E and MDMCFG4.CHANBW_M configuration registers control the receiver channel filter bandwidth, which scales with the crystal oscillator frequency.

The following formula gives the relation between the register settings and the channel filter bandwidth:

$$BW_{channel} = \frac{f_{XOSC}}{8 \cdot (4 + CHANBW_M) \cdot 2^{CHANBW_E}}$$

Table 26 lists the channel filter bandwidths supported by the CC1101.

MDMCFG4. CHANBW_M	MDMCFG4.CHANBW_E			
	00	01	10	11
00	812	406	203	102
01	650	325	162	81
10	541	270	135	68
11	464	232	116	58

Table 26: Channel Filter Bandwidths [kHz] (assuming a 26 MHz crystal)

By compensating for a frequency offset between the transmitter and the receiver, the filter bandwidth can be reduced and the sensitivity improved, see more in DN005 [17] and in Section 14.1.

14 Demodulator, Symbol Synchronizer, and Data Decision

CC1101 contains an advanced and highly configurable demodulator. Channel filtering and frequency offset compensation is performed digitally. To generate the RSSI level (see Section 17.3 for more information), the signal level in the channel is estimated. Data filtering is also included for enhanced performance.

14.1 Frequency Offset Compensation

The CC1101 has a very fine frequency resolution (see Table 15). This feature can be used to compensate for frequency offset and drift.

When using 2-FSK, GFSK, 4-FSK, or MSK modulation, the demodulator will compensate for the offset between the transmitter and receiver frequency within certain limits, by estimating the centre of the received data. The frequency offset compensation configuration is controlled from the FOCCFG register. By compensating for a large frequency offset between the transmitter and the receiver, the sensitivity can be improved, see DN005 [17].

The tracking range of the algorithm is selectable as fractions of the channel bandwidth with the `FOCCFG.FOC_LIMIT` configuration register.

If the `FOCCFG.FOC_BS_CS_GATE` bit is set, the offset compensator will freeze until carrier sense asserts. This may be useful when the radio is in RX for long periods with no traffic, since the algorithm may drift to the boundaries when trying to track noise.

The tracking loop has two gain factors, which affects the settling time and noise sensitivity of the algorithm. `FOCCFG.FOC_PRE_K` sets the gain before the sync word is detected, and `FOCCFG.FOC_POST_K` selects the gain after the sync word has been found.

Note: Frequency offset compensation is not supported for ASK or OOK modulation.

The estimated frequency offset value is available in the `FREQEST` status register. This can be used for permanent frequency offset compensation. By writing the value from `FREQEST` into `FSCTRL0.FREQOFF`, the frequency synthesizer will automatically be adjusted according to the estimated frequency offset. More details regarding this permanent frequency compensation algorithm can be found in DN015 [10].

14.2 Bit Synchronization

The bit synchronization algorithm extracts the clock from the incoming symbols. The algorithm requires that the expected data rate is programmed as described in Section 12. Re-synchronization is performed continuously to adjust for error in the incoming symbol rate.

14.3 Byte Synchronization

Byte synchronization is achieved by a continuous sync word search. The sync word is a 16 bit configurable field (can be repeated to get a 32 bit) that is automatically inserted at the start of the packet by the modulator in transmit mode. The MSB in the sync word is sent first. The demodulator uses this field to find the byte boundaries in the stream of bits. The sync word will also function as a system identifier, since only packets with the correct predefined sync word will be received if the sync word detection in RX is enabled in register `MDMCFG2` (see Section 17.1). The sync word detector correlates against the user-configured 16 or 32 bit sync word. The correlation threshold can be set to 15/16, 16/16, or 30/32 bits match. The sync word can be further qualified using the preamble quality indicator mechanism described below and/or a carrier sense condition. The sync word is configured through the `SYNC1` and `SYNC0` registers.

In order to make false detections of sync words less likely, a mechanism called preamble quality indication (PQI) can be used to qualify the sync word. A threshold value for the preamble quality must be exceeded in order for a detected sync word to be accepted. See Section 17.2 for more details.

15 Packet Handling Hardware Support

The CC1101 has built-in hardware support for packet oriented radio protocols.

In transmit mode, the packet handler can be configured to add the following elements to the packet stored in the TX FIFO:

- A programmable number of preamble bytes
- A two byte synchronization (sync) word. Can be duplicated to give a 4-byte sync word (recommended). It is not possible to only insert preamble or only insert a sync word
- A CRC checksum computed over the data field.

The recommended setting is 4-byte preamble and 4-byte sync word, except for 500 kBaud data rate where the recommended preamble length is 8 bytes. In addition, the following can be implemented on the data field and the optional 2-byte CRC checksum:

- Whitening of the data with a PN9 sequence
- Forward Error Correction (FEC) by the use of interleaving and coding of the data (convolutional coding)

In receive mode, the packet handling support will de-construct the data packet by implementing the following (if enabled):

- Preamble detection
- Sync word detection
- CRC computation and CRC check
- One byte address check
- Packet length check (length byte checked against a programmable maximum length)
- De-whitening
- De-interleaving and decoding

Optionally, two status bytes (see Table 27 and Table 28) with RSSI value, Link Quality Indication, and CRC status can be appended in the RX FIFO.

Bit	Field Name	Description
7:0	RSSI	RSSI value

Table 27: Received Packet Status Byte 1 (first byte appended after the data)

Bit	Field Name	Description
7	CRC_OK	1: CRC for received data OK (or CRC disabled) 0: CRC error in received data
6:0	LQI	Indicating the link quality

Table 28: Received Packet Status Byte 2 (second byte appended after the data)

Note: Register fields that control the packet handling features should only be altered when CC1101 is in the IDLE state.

15.1 Data Whitening

From a radio perspective, the ideal over the air data are random and DC free. This results in the smoothest power distribution over the occupied bandwidth. This also gives the regulation loops in the receiver uniform operation conditions (no data dependencies).

Real data often contain long sequences of zeros and ones. In these cases, performance can be improved by whitening the data before transmitting, and de-whitening the data in the receiver.

With CC1101, this can be done automatically. By setting `PKTCTRL0.WHITE_DATA=1`, all data, except the preamble and the sync word will be XOR-ed with a 9-bit pseudo-random (PN9) sequence before being transmitted. This is shown in Figure 18. At the receiver end, the data are XOR-ed with the same pseudo-random sequence. In this way, the whitening is reversed, and the original data appear in the receiver. The PN9 sequence is initialized to all 1's.

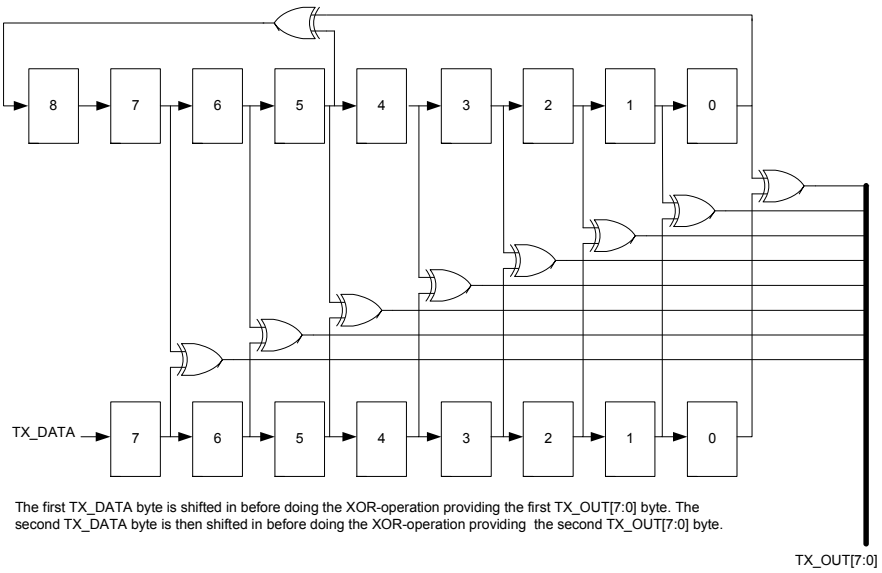

Figure 18: Data Whitening in TX Mode

15.2 Packet Format

The format of the data packet can be configured and consists of the following items (see Figure 19):

- Preamble
- Synchronization word
- Optional length byte
- Optional address byte
- Payload
- Optional 2 byte CRC

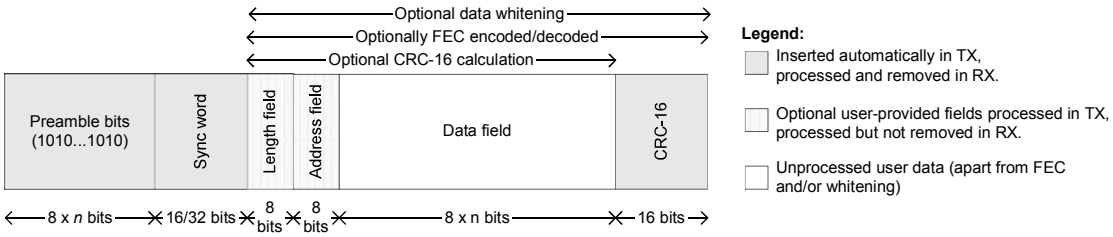

Figure 19: Packet Format

The preamble pattern is an alternating sequence of ones and zeros (10101010…). The minimum length of the preamble is programmable through the value of `MDMCFG1.NUM_PREAMBLE`. When enabling TX, the modulator will start transmitting the preamble. When the programmed number of preamble bytes has been transmitted, the modulator will send the sync word and then data from the TX FIFO if data is available. If the TX FIFO is empty, the modulator will continue to send preamble bytes until the first byte is written to the TX FIFO. The modulator will then send the sync word and then the data bytes.

The synchronization word is a two-byte value set in the `SYNC1` and `SYNC0` registers. The sync word provides byte synchronization of the incoming packet. A one-byte sync word can be emulated by setting the `SYNC1` value to the preamble pattern. It is also possible to emulate a 32 bit sync word by setting `MDMCFG2.SYNC_MODE` to 3 or 7. The sync word will then be repeated twice.

CC1101 supports both constant packet length protocols and variable length protocols. Variable or fixed packet length mode can be used for packets up to 255 bytes. For longer

packets, infinite packet length mode must be used.

Fixed packet length mode is selected by setting PKTCTRL0.LENGTH_CONFIG=0. The desired packet length is set by the PKTLEN register. This value must be different from 0.

In variable packet length mode, PKTCTRL0.LENGTH_CONFIG=1, the packet length is configured by the first byte after the sync word. The packet length is defined as the payload data, excluding the length byte and the optional CRC. The PKTLEN register is used to set the maximum packet length allowed in RX. Any packet received with a length byte with a value greater than PKTLEN will be discarded. The PKTLEN value must be different from 0.The first byte written to the TXFIFO must be different from 0.

With PKTCTRL0.LENGTH_CONFIG=2, the packet length is set to infinite and transmission and reception will continue until turned off manually. As described in the next section, this can be used to support packet formats with different length configuration than natively supported by CC1101. One should make sure that TX mode is not turned off during the transmission of the first half of any byte. Refer to the CC1101 Errata Notes [3] for more details.

Note: The minimum packet length supported (excluding the optional length byte and CRC) is one byte of payload data.

15.2.1 Arbitrary Length Field Configuration

The packet length register, PKTLEN, can be reprogrammed during receive and transmit. In combination with fixed packet length mode (PKTCTRL0.LENGTH_CONFIG=0), this opens the possibility to have a different length field configuration than supported for variable length packets (in variable packet length mode the length byte is the first byte after the sync word). At the start of reception, the packet length is set to a large value. The MCU reads out enough bytes to interpret the length field in the packet. Then the PKTLEN value is set according to this value. The end of packet will occur when the byte counter in the packet handler is equal to the PKTLEN register. Thus, the MCU must be able to program the correct length, before the internal counter reaches the packet length.

15.2.2 Packet Length > 255

The packet automation control register, PKTCTRL0, can be reprogrammed during TX and RX. This opens the possibility to transmit and receive packets that are longer than 256 bytes and still be able to use the packet handling hardware support. At the start of the packet, the infinite packet length mode (PKTCTRL0.LENGTH_CONFIG=2) must be active. On the TX side, the PKTLEN register is set to mod(length, 256). On the RX side the MCU reads out enough bytes to interpret the length field in the packet and sets the PKTLEN register to mod(length, 256). When less than 256 bytes remains of the packet, the MCU disables infinite packet length mode and activates fixed packet length mode. When the internal byte counter reaches the PKTLEN value, the transmission or reception ends (the radio enters the state determined by TXOFF_MODE or RXOFF_MODE). Automatic CRC appending/checking can also be used (by setting PKTCTRL0.CRC_EN=1).

When for example a 600-byte packet is to be transmitted, the MCU should do the following (see also Figure 20)

- Set PKTCTRL0.LENGTH_CONFIG=2.
- Pre-program the PKTLEN register to mod(600, 256) = 88.
- Transmit at least 345 bytes (600 - 255), for example by filling the 64-byte TX FIFO six times (384 bytes transmitted).
- Set PKTCTRL0.LENGTH_CONFIG=0.
- The transmission ends when the packet counter reaches 88. A total of 600 bytes are transmitted.

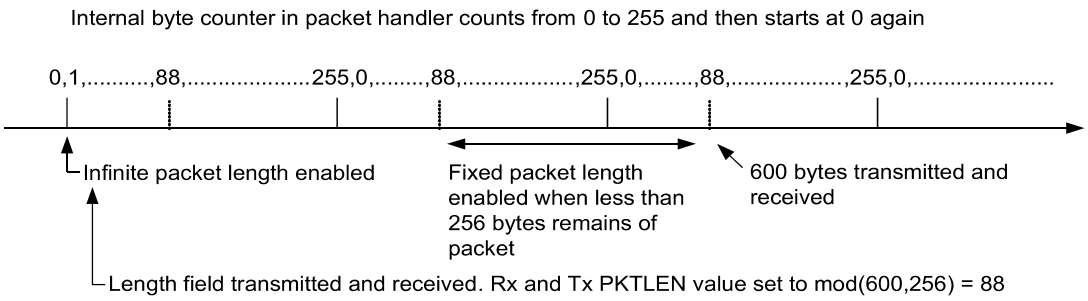

Figure 20: Packet Length > 255

15.3 Packet Filtering in Receive Mode

CC1101 supports three different types of packet-filtering; address filtering, maximum length filtering, and CRC filtering.

15.3.1 Address Filtering

Setting `PKTCTRL1.ADR_CHK` to any other value than zero enables the packet address filter. The packet handler engine will compare the destination address byte in the packet with the programmed node address in the `ADDR` register and the 0x00 broadcast address when `PKTCTRL1.ADR_CHK=10` or both the 0x00 and 0xFF broadcast addresses when `PKTCTRL1.ADR_CHK=11`. If the received address matches a valid address, the packet is received and written into the RX FIFO. If the address match fails, the packet is discarded and receive mode restarted (regardless of the `MCSM1.RXOFF_MODE` setting).

If the received address matches a valid address when using infinite packet length mode and address filtering is enabled, 0xFF will be written into the RX FIFO followed by the address byte and then the payload data.

15.3.2 Maximum Length Filtering

In variable packet length mode, `PKTCTRL0.LENGTH_CONFIG=1`, the `PKTLEN.PACKET_LENGTH` register value is used to set the maximum allowed packet length. If the received length byte has a larger value than this, the packet is discarded and receive mode restarted (regardless of the `MCSM1.RXOFF_MODE` setting).

15.3.3 CRC Filtering

The filtering of a packet when CRC check fails is enabled by setting `PKTCTRL1.CRC_AUTOFLUSH=1`. The CRC auto flush function will flush the entire RX FIFO if the CRC check fails. After auto flushing the RX FIFO, the next state depends on the `MCSM1.RXOFF_MODE` setting.

When using the auto flush function, the maximum packet length is 63 bytes in variable packet length mode and 64 bytes in fixed packet length mode. Note that when `PKTCTRL1.APPEND_STATUS` is enabled, the maximum allowed packet length is reduced by two bytes in order to make room in the RX FIFO for the two status bytes appended at the end of the packet. Since the entire RX FIFO is flushed when the CRC check fails, the previously received packet must be read out of the FIFO before receiving the current packet. The MCU must not read from the current packet until the CRC has been checked as OK.

15.4 Packet Handling in Transmit Mode

The payload that is to be transmitted must be written into the TX FIFO. The first byte written must be the length byte when variable packet length is enabled. The length byte has a value equal to the payload of the packet (including the optional address byte). If address recognition is enabled on the receiver, the second byte written to the TX FIFO must be the address byte.

If fixed packet length is enabled, the first byte written to the TX FIFO should be the address (assuming the receiver uses address recognition).

The modulator will first send the programmed number of preamble bytes. If data is available in the TX FIFO, the modulator will send the two-byte (optionally 4-byte) sync word followed by the payload in the TX FIFO. If CRC is enabled, the checksum is calculated over all the data pulled from the TX FIFO, and the result is sent as two extra bytes following the payload data. If the TX FIFO runs empty before the complete packet has been transmitted, the radio will enter TXFIFO_UNDERFLOW state. The only way to exit this state is by issuing an SFTX strobe. Writing to the TX FIFO after it has underflowed will not restart TX mode.

If whitening is enabled, everything following the sync words will be whitened. This is done before the optional FEC/Interleaver stage. Whitening is enabled by setting `PKTCTRL0.WHITE_DATA=1`.

If FEC/Interleaving is enabled, everything following the sync words will be scrambled by the interleaver and FEC encoded before being modulated. FEC is enabled by setting `MDMCFG1.FEC_EN=1`.

15.5 Packet Handling in Receive Mode

In receive mode, the demodulator and packet handler will search for a valid preamble and the sync word. When found, the demodulator has obtained both bit and byte synchronization and will receive the first payload byte.

If FEC/Interleaving is enabled, the FEC decoder will start to decode the first payload byte. The interleaver will de-scramble the bits before any other processing is done to the data.

If whitening is enabled, the data will be de-whitened at this stage.

When variable packet length mode is enabled, the first byte is the length byte. The packet handler stores this value as the packet length and receives the number of bytes indicated by the length byte. If fixed packet length mode is used, the packet handler will accept the programmed number of bytes.

Next, the packet handler optionally checks the address and only continues the reception if the address matches. If automatic CRC check is enabled, the packet handler computes CRC and matches it with the appended CRC checksum.

At the end of the payload, the packet handler will optionally write two extra packet status bytes (see Table 27 and Table 28) that contain CRC status, link quality indication, and RSSI value.

15.6 Packet Handling in Firmware

When implementing a packet oriented radio protocol in firmware, the MCU needs to know when a packet has been received/transmitted. Additionally, for packets longer than 64 bytes, the RX FIFO needs to be read while in RX and the TX FIFO needs to be refilled while in TX. This means that the MCU needs to know the number of bytes that can be read from or written to the RX FIFO and TX FIFO respectively. There are two possible solutions to get the necessary status information:

a) Interrupt Driven Solution

The GDO pins can be used in both RX and TX to give an interrupt when a sync word has been received/transmitted or when a complete packet has been received/transmitted by setting `IOCFGx.GDOx_CFG=0x06`. In addition, there are two configurations for the `IOCFGx.GDOx_CFG` register that can be used as an interrupt source to provide information on how many bytes that are in the RX FIFO and TX FIFO respectively. The `IOCFGx.GDOx_CFG=0x00` and the `IOCFGx.GDOx_CFG=0x01` configurations are associated with the RX FIFO while the `IOCFGx.GDOx_CFG=0x02` and the `IOCFGx.GDOx_CFG=0x03` configurations are associated with the TX FIFO. See Table 41 for more information.

b) SPI Polling

The `PKTSTATUS` register can be polled at a given rate to get information about the current GDO2 and GDO0 values respectively. The `RXBYTES` and `TXBYTES` registers can be polled at a given rate to get information about the number of bytes in the RX FIFO and TX FIFO respectively. Alternatively, the number of bytes in the RX FIFO and TX FIFO can be read from the chip status byte returned on the

MISO line each time a header byte, data byte, or command strobe is sent on the SPI bus.

It is recommended to employ an interrupt driven solution since high rate SPI polling reduces the RX sensitivity. Furthermore, as explained in Section 10.3 and the CC1101 Errata Notes [3], when using SPI polling, there is a small, but finite, probability that a single read from registers PKTSTATUS , RXBYTES and TXBYTES is being corrupt. The same is the case when reading the chip status byte.

Refer to the TI website for SW examples ([6] and [7]).

16 Modulation Formats

CC1101 supports amplitude, frequency, and phase shift modulation formats. The desired modulation format is set in the MDMCFG2.MOD_FORMAT register.

Optionally, the data stream can be Manchester coded by the modulator and decoded by the demodulator. This option is enabled by setting MDMCFG2.MANCHESTER_EN=1.

Note: Manchester encoding is not supported at the same time as using the FEC/Interleaver option or when using MSK and 4-FSK modulation.

16.1 Frequency Shift Keying

CC1101 supports both 2-FSK and 4-FSK modulation. 2-FSK can optionally be shaped by a Gaussian filter with BT = 0.5, producing a GFSK modulated signal. This spectrum-shaping feature improves adjacent channel power (ACP) and occupied bandwidth. When selecting 4-FSK, the preamble and sync word is sent using 2-FSK (see Figure 21).

In 'true' 2-FSK systems with abrupt frequency shifting, the spectrum is inherently broad. By making the frequency shift 'softer', the spectrum can be made significantly narrower. Thus, higher data rates can be transmitted in the same bandwidth using GFSK.

When 2-FSK/GFSK/4-FSK modulation is used, the DEVIATN register specifies the expected frequency deviation of incoming signals in RX and should be the same as the TX deviation for demodulation to be performed reliably and robustly.

The frequency deviation is programmed with the DEVIATION_M and DEVIATION_E values in the DEVIATN register. The value has an exponent/mantissa form, and the resultant deviation is given by:

$$f_{dev} = \frac{f_{xosc}}{2^{17}} \cdot (8 + DEVIATION_M) \cdot 2^{DEVIATION_E}$$

The symbol encoding is shown in Table 29.

Format	Symbol	Coding
2-FSK/GFSK	'0'	– Deviation
	'1'	+ Deviation
4-FSK	'01'	– Deviation
	'00'	– 1/3· Deviation
	'10'	+1/3· Deviation
	'11'	+ Deviation

Table 29: Symbol Encoding for 2-FSK/GFSK and 4-FSK Modulation

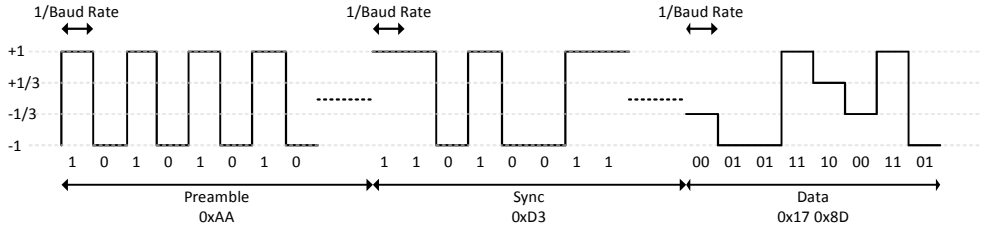

Figure 21: Data Sent Over the Air (MDMCFG2.MOD_FORMAT=100)

16.2 Minimum Shift Keying

When using MSK[2], the complete transmission (preamble, sync word, and payload) will be MSK modulated.

Phase shifts are performed with a constant transition time. The fraction of a symbol period used to change the phase can be modified with the DEVIATN.DEVIATION_M setting. This is equivalent to changing the shaping of the symbol. The DEVIATN register setting has no effect in RX when using MSK.

When using MSK, Manchester encoding/decoding should be disabled by setting MDMCFG2.MANCHESTER_EN=0.

The MSK modulation format implemented in CC1101 inverts the sync word and data compared to e.g. signal generators.

[2] Identical to offset QPSK with half-sine shaping (data coding may differ).

16.3 Amplitude Modulation

CC1101 supports two different forms of amplitude modulation: On-Off Keying (OOK) and Amplitude Shift Keying (ASK).

OOK modulation simply turns the PA on or off to modulate ones and zeros respectively.

The ASK variant supported by the CC1101 allows programming of the modulation depth (the difference between 1 and 0), and shaping of the pulse amplitude. Pulse shaping produces a more bandwidth constrained output spectrum.

When using OOK/ASK, the AGC settings from the SmartRF Studio [5] preferred FSK/MSK settings are not optimum. DN022 [16] give guidelines on how to find optimum OOK/ASK settings from the preferred settings in SmartRF Studio [5]. The DEVIATN register setting has no effect in either TX or RX when using OOK/ASK.

17 Received Signal Qualifiers and Link Quality Information

CC1101 has several qualifiers that can be used to increase the likelihood that a valid sync word is detected:

- Sync Word Qualifier
- Preamble Quality Threshold
- RSSI
- Carrier Sense
- Clear Channel Assessment
- Link Quality Indicator

17.1 Sync Word Qualifier

If sync word detection in RX is enabled in the MDMCFG2 register, the CC1101 will not start filling the RX FIFO and perform the packet filtering described in Section 15.3 before a valid sync word has been detected. The sync word qualifier mode is set by MDMCFG2.SYNC_MODE and is summarized in Table 30. Carrier sense in Table 30 is described in Section 17.4.

MDMCFG2.SYNC_MODE	Sync Word Qualifier Mode
000	No preamble/sync
001	15/16 sync word bits detected
010	16/16 sync word bits detected
011	30/32 sync word bits detected
100	No preamble/sync + carrier sense above threshold
101	15/16 + carrier sense above threshold
110	16/16 + carrier sense above threshold
111	30/32 + carrier sense above threshold

Table 30: Sync Word Qualifier Mode

17.2 Preamble Quality Threshold (PQT)

The Preamble Quality Threshold (PQT) sync word qualifier adds the requirement that the received sync word must be preceded with a preamble with a quality above the programmed threshold.

Another use of the preamble quality threshold is as a qualifier for the optional RX termination timer. See Section 19.7 for details.

The preamble quality estimator increases an internal counter by one each time a bit is received that is different from the previous bit, and decreases the counter by eight each time a bit is received that is the same as the last bit.

The threshold is configured with the register field `PKTCTRL1.PQT`. A threshold of 4·`PQT` for this counter is used to gate sync word detection. By setting the value to zero, the preamble quality qualifier of the sync word is disabled.

A "Preamble Quality Reached" signal can be observed on one of the GDO pins by setting `IOCFGx.GDOx_CFG=8`. It is also possible to determine if preamble quality is reached by checking the `PQT_REACHED` bit in the `PKTSTATUS` register. This signal / bit asserts when the received signal exceeds the PQT.

17.3 RSSI

The RSSI value is an estimate of the signal power level in the chosen channel. This value is based on the current gain setting in the RX chain and the measured signal level in the channel.

In RX mode, the RSSI value can be read continuously from the `RSSI` status register until the demodulator detects a sync word (when sync word detection is enabled). At that point the RSSI readout value is frozen until the next time the chip enters the RX state.

> **Note**: It takes some time from the radio enters RX mode until a valid RSSI value is present in the `RSSI` register. Please see DN505 [12] for details on how the RSSI response time can be estimated.

The RSSI value is given in dBm with a ½ dB resolution. The RSSI update rate, f_{RSSI}, depends on the receiver filter bandwidth ($BW_{channel}$ is defined in Section 13) and `AGCCTRL0.FILTER_LENGTH`.

$$f_{RSSI} = \frac{2 \cdot BW_{channel}}{8 \cdot 2^{FILTER_LENGTH}}$$

If `PKTCTRL1.APPEND_STATUS` is enabled, the last RSSI value of the packet is automatically added to the first byte appended after the payload.

The RSSI value read from the `RSSI` status register is a 2's complement number. The following procedure can be used to convert the RSSI reading to an absolute power level (RSSI_dBm)

1) Read the `RSSI` status register
2) Convert the reading from a hexadecimal number to a decimal number (RSSI_dec)
3) If RSSI_dec ≥ 128 then RSSI_dBm = (RSSI_dec - 256)/2 – RSSI_offset

4) Else if RSSI_dec < 128 then RSSI_dBm = (RSSI_dec)/2 – RSSI_offset

Table 31 gives typical values for the RSSI_offset. Figure 22 and Figure 23 show typical plots of RSSI readings as a function of input power level for different data rates.

Data rate [kBaud]	RSSI_offset [dB], 433 MHz	RSSI_offset [dB], 868 MHz
1.2	74	74
38.4	74	74
250	74	74
500	74	74

Table 31: Typical RSSI_offset Values

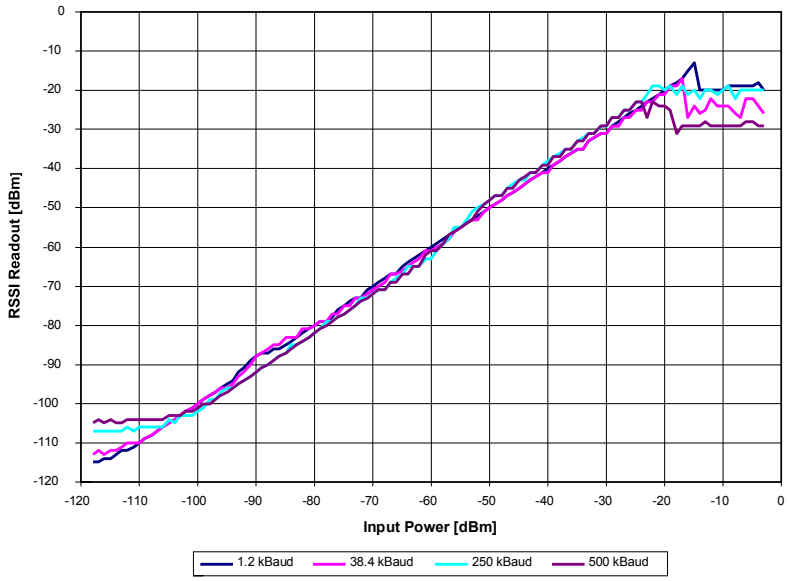

Figure 22: Typical RSSI Value vs. Input Power Level for Different Data Rates at 433 MHz

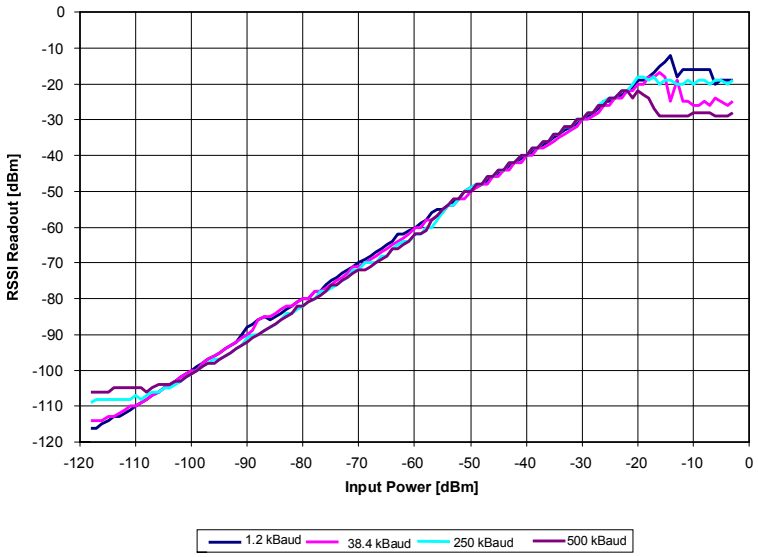

Figure 23: Typical RSSI Value vs. Input Power Level for Different Data Rates at 868 MHz

17.4 Carrier Sense (CS)

Carrier sense (CS) is used as a sync word qualifier and for Clear Channel Assessment (see Section 17.5). CS can be asserted based on two conditions which can be individually adjusted:

- CS is asserted when the RSSI is above a programmable absolute threshold, and de-asserted when RSSI is below the same threshold (with hysteresis). See more in Section 17.4.1.
- CS is asserted when the RSSI has increased with a programmable number of dB from one RSSI sample to the next, and de-asserted when RSSI has decreased with the same number of dB. This setting is not dependent on the absolute signal level and is thus useful to detect signals in environments with time varying noise floor. See more in Section 17.4.2.

Carrier sense can be used as a sync word qualifier that requires the signal level to be higher than the threshold for a sync word search to be performed and is set by setting `MDMCFG2` The carrier sense signal can be observed on one of the GDO pins by setting `IOCFGx.GDOx_CFG=14` and in the status register bit `PKTSTATUS.CS`.

Other uses of Carrier sense include the TX-if-CCA function (see Section 17.5) and the optional fast RX termination (see Section 19.7).

CS can be used to avoid interference from other RF sources in the ISM bands.

17.4.1 CS Absolute Threshold

The absolute threshold related to the RSSI value depends on the following register fields:

- `AGCCTRL2.MAX_LNA_GAIN`
- `AGCCTRL2.MAX_DVGA_GAIN`
- `AGCCTRL1.CARRIER_SENSE_ABS_THR`
- `AGCCTRL2.MAGN_TARGET`

For given `AGCCTRL2.MAX_LNA_GAIN` and `AGCCTRL2.MAX_DVGA_GAIN` settings, the absolute threshold can be adjusted ±7 dB in steps of 1 dB using `CARRIER_SENSE_ABS_THR`.

The `MAGN_TARGET` setting is a compromise between blocker tolerance/selectivity and sensitivity. The value sets the desired signal level in the channel into the demodulator. Increasing this value reduces the headroom for blockers, and therefore close-in selectivity. It is strongly recommended to use SmartRF Studio [5] to generate the correct `MAGN_TARGET` setting. Table 32 and Table

33 show the typical RSSI readout values at the CS threshold at 2.4 kBaud and 250 kBaud data rate respectively. The default reset value for `CARRIER_SENSE_ABS_THR` = 0 (0 dB) has been used. `MAGN_TARGET` = 3 (33 dB) and 7 (42 dB) have been used for 2.4 kBaud and 250 kBaud data rate respectively. For other data rates, the user must generate similar tables to find the CS absolute threshold.

If the threshold is set high, i.e. only strong signals are wanted, the threshold should be adjusted upwards by first reducing the `MAX_LNA_GAIN` value and then the `MAX_DVGA_GAIN` value. This will reduce power consumption in the receiver front end, since the highest gain settings are avoided.

		MAX_DVGA_GAIN[1:0]			
		00	01	10	11
MAX_LNA_GAIN[2:0]	000	-97.5	-91.5	-85.5	-79.5
	001	-94	-88	-82.5	-76
	010	-90.5	-84.5	-78.5	-72.5
	011	-88	-82.5	-76.5	-70.5
	100	-85.5	-80	-73.5	-68
	101	-84	-78	-72	-66
	110	-82	-76	-70	-64
	111	-79	-73.5	-67	-61

Table 32: Typical RSSI Value in dBm at CS Threshold with `MAGN_TARGET` = 3 (33 dB) at 2.4 kBaud, 868 MHz

		MAX_DVGA_GAIN[1:0]			
		00	01	10	11
MAX_LNA_GAIN[2:0]	000	-90.5	-84.5	-78.5	-72.5
	001	-88	-82	-76	-70
	010	-84.5	-78.5	-72	-66
	011	-82.5	-76.5	-70	-64
	100	-80.5	-74.5	-68	-62
	101	-78	-72	-66	-60
	110	-76.5	-70	-64	-58
	111	-74.5	-68	-62	-56

Table 33: Typical RSSI Value in dBm at CS Threshold with `MAGN_TARGET` = 7 (42 dB) at 250 kBaud, 868 MHz

17.4.2 CS Relative Threshold

The relative threshold detects sudden changes in the measured signal level. This setting does not depend on the absolute signal level and is thus useful to detect signals in environments with a time varying noise floor. The register field `AGCCTRL1.CARRIER_SENSE_REL_THR` is used to enable/disable relative CS, and to select threshold of 6 dB, 10 dB, or 14 dB RSSI change.

17.5 Clear Channel Assessment (CCA)

The Clear Channel Assessment (CCA) is used to indicate if the current channel is free or busy. The current CCA state is viewable on any of the GDO pins by setting `IOCFGx.GDOx_CFG=0x09`.

`MCSM1.CCA_MODE` selects the mode to use when determining CCA.

When the `STX` or `SFSTXON` command strobe is given while CC1101 is in the RX state, the TX or FSTXON state is only entered if the clear channel requirements are fulfilled. Otherwise, the chip will remain in RX. If the channel then becomes available, the radio will not enter TX or FSTXON state before a new strobe command is sent on the SPI interface. This feature is called TX-if-CCA. Four CCA requirements can be programmed:

- Always (CCA disabled, always goes to TX)
- If RSSI is below threshold
- Unless currently receiving a packet
- Both the above (RSSI below threshold and not currently receiving a packet)

17.6 Link Quality Indicator (LQI)

The Link Quality Indicator is a metric of the current quality of the received signal. If `PKTCTRL1.APPEND_STATUS` is enabled, the value is automatically added to the last byte appended after the payload. The value can also be read from the `LQI` status register. The LQI gives an estimate of how easily a received signal can be demodulated by accumulating the magnitude of the error between ideal constellations and the received signal over the 64 symbols immediately following the sync word. LQI is best used as a relative measurement of the link quality (a low value indicates a better link than what a high value does), since the value is dependent on the modulation format.

18 Forward Error Correction with Interleaving

18.1 Forward Error Correction (FEC)

CC1101 has built in support for Forward Error Correction (FEC). To enable this option, set `MDMCFG1.FEC_EN` to 1. FEC is only supported in fixed packet length mode, i.e. when `PKTCTRL0.LENGTH_CONFIG=0`. FEC is employed on the data field and CRC word in order to reduce the gross bit error rate when operating near the sensitivity limit. Redundancy is added to the transmitted data in such a way that the receiver can restore the original data in the presence of some bit errors.

The use of FEC allows correct reception at a lower Signal-to-Noise Ratio (SNR), thus extending communication range if the receiver bandwidth remains constant. Alternatively, for a given SNR, using FEC decreases the bit error rate (BER). The packet error rate (PER) is related to BER by

$$PER = 1 - (1 - BER)^{packet_length}$$

A lower BER can therefore be used to allow longer packets, or a higher percentage of packets of a given length, to be transmitted successfully. Finally, in realistic ISM radio environments, transient and time-varying phenomena will produce occasional errors even in otherwise good reception conditions. FEC will mask such errors and, combined with interleaving of the coded data, even correct relatively long periods of faulty reception (burst errors).

The FEC scheme adopted for CC1101 is convolutional coding, in which *n* bits are generated based on *k* input bits and the *m* most recent input bits, forming a code stream able to withstand a certain number of bit errors between each coding state (the *m*-bit window).

The convolutional coder is a rate ½ code with a constraint length of $m = 4$. The coder codes one input bit and produces two output bits; hence, the effective data rate is halved. This means that in order to transmit at the same effective data rate when using FEC, it is necessary to use twice as high over-the-air data rate. This will require a higher receiver bandwidth, and thus reduce sensitivity. In other words the improved reception by using FEC and the degraded sensitivity from a higher receiver bandwidth will be counteracting factors. See Design Note DN504 for more details [19].

18.2 Interleaving

Data received through radio channels will often experience burst errors due to interference and time-varying signal strengths. In order to increase the robustness to errors spanning multiple bits, interleaving is used when FEC is enabled. After de-interleaving, a continuous span of errors in the received stream will become single errors spread apart.

CC1101 employs matrix interleaving, which is illustrated in Figure 24. The on-chip interleaving and de-interleaving buffers are 4 x 4 matrices. In the transmitter, the data bits from the rate ½ convolutional coder are written into the rows of the matrix, whereas the bit sequence to be transmitted is read from the columns of the matrix. Conversely, in the receiver, the received symbols are written into the rows of the matrix, whereas the data passed onto the convolutional decoder is read from the columns of the matrix.

CC1101 employs a 4x4 matrix interleaver with 2 bits (one encoder output symbol) per cell and the amount of data transmitted over the air will thus always be a multiple of four bytes (see DN507 [20] for more details). When FEC and interleaving is used, at least one extra byte is required for trellis termination and the packet control hardware therefore automatically inserts one or two extra bytes at the end of the packet. These bytes will be invisible to the user, as they are removed before the received packet enters the RXFIFO.

When FEC and interleaving is used the minimum data payload is 2 bytes.

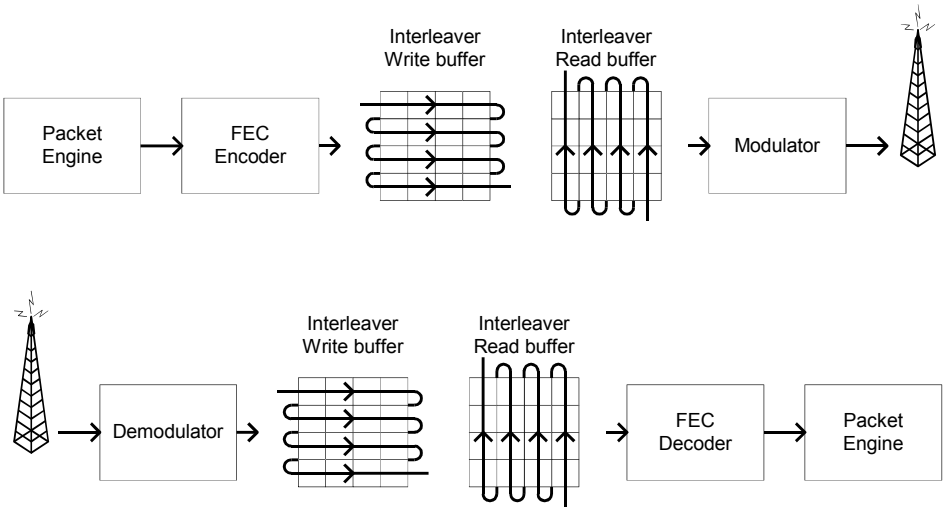

Figure 24: General Principle of Matrix Interleaving

19 Radio Control

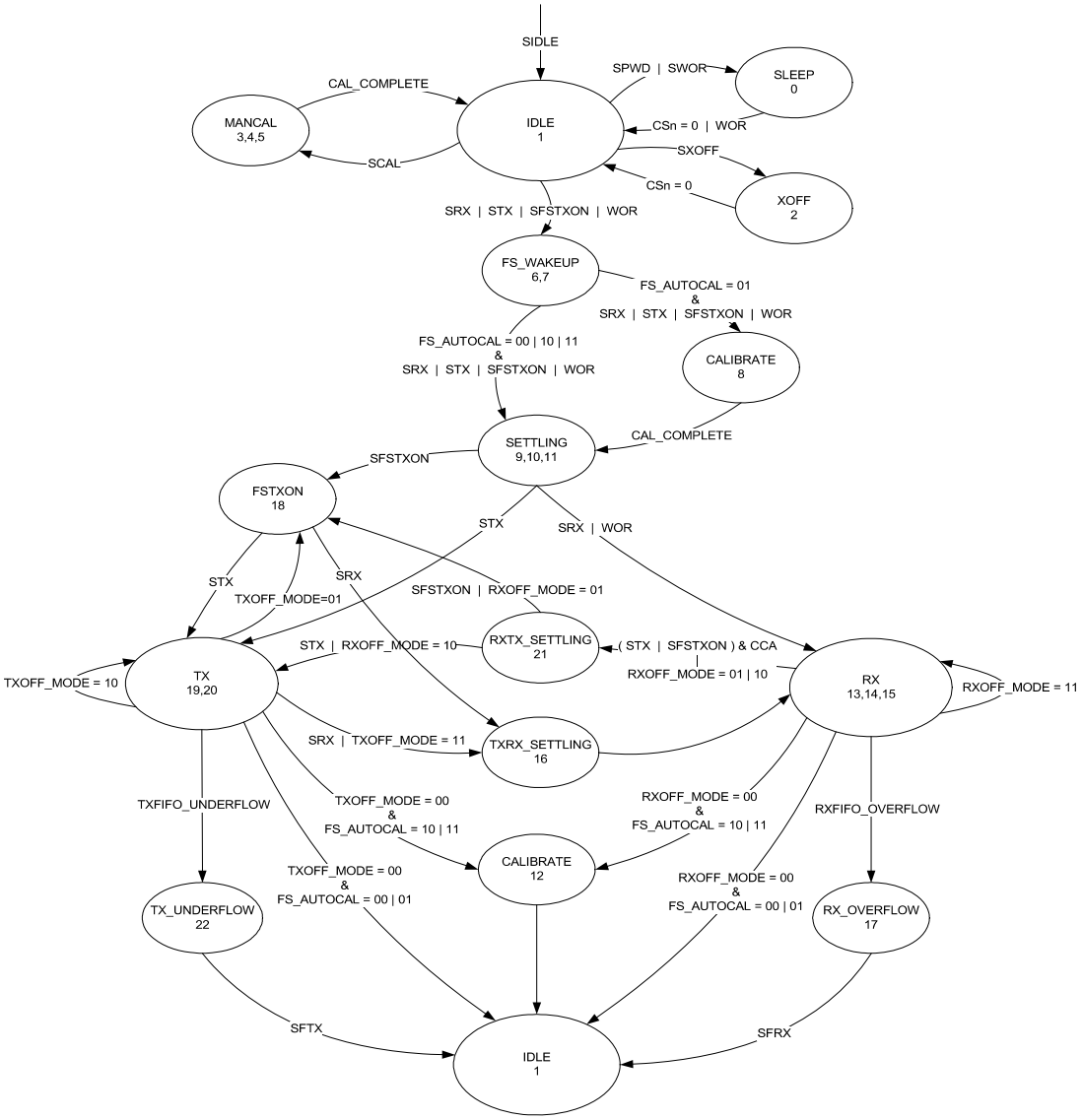

Figure 25: Complete Radio Control State Diagram

CC1101 has a built-in state machine that is used to switch between different operational states (modes). The change of state is done either by using command strobes or by internal events such as TX FIFO underflow.

A simplified state diagram, together with typical usage and current consumption, is shown in Figure 13 on page 28. The complete radio control state diagram is shown in Figure 25. The numbers refer to the state number readable in the `MARCSTATE` status register. This register is primarily for test purposes.

19.1 Power-On Start-Up Sequence

When the power supply is turned on, the system must be reset. This is achieved by one of the two sequences described below, i.e. automatic power-on reset (POR) or manual reset. After the automatic power-on reset or manual reset, it is also recommended to

change the signal that is output on the GDO0 pin. The default setting is to output a clock signal with a frequency of CLK_XOSC/192. However, to optimize performance in TX and RX, an alternative GDO setting from the settings found in Table 41 on page 62 should be selected.

19.1.1 Automatic POR

A power-on reset circuit is included in the ***CC1101***. The minimum requirements stated in Table 18 must be followed for the power-on reset to function properly. The internal power-up sequence is completed when `CHIP_RDYn` goes low. `CHIP_RDYn` is observed on the SO pin after CSn is pulled low. See Section 10.1 for more details on `CHIP_RDYn`.

When the ***CC1101*** reset is completed, the chip will be in the IDLE state and the crystal oscillator will be running. If the chip has had sufficient time for the crystal oscillator to stabilize after the power-on-reset, the SO pin will go low immediately after taking CSn low. If CSn is taken low before reset is completed, the SO pin will first go high, indicating that the crystal oscillator is not stabilized, before going low as shown in Figure 26.

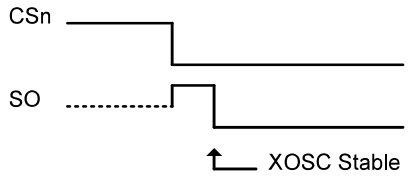

Figure 26: Power-On Reset

19.1.2 Manual Reset

The other global reset possibility on ***CC1101*** uses the `SRES` command strobe. By issuing this strobe, all internal registers and states are set to the default, IDLE state. The manual power-up sequence is as follows (see Figure 27):

- Set SCLK = 1 and SI = 0, to avoid potential problems with pin control mode (see Section 11.3).
- Strobe CSn low / high.
- Hold CSn low and then high for at least 40 µs relative to pulling CSn low
- Pull CSn low and wait for SO to go low (`CHIP_RDYn`).
- Issue the `SRES` strobe on the SI line.
- When SO goes low again, reset is complete and the chip is in the IDLE state.

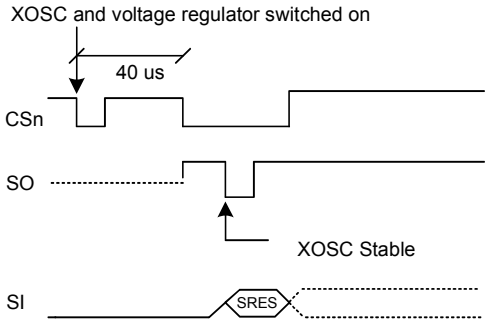

Figure 27: Power-On Reset with `SRES`

> Note that the above reset procedure is only required just after the power supply is first turned on. If the user wants to reset the ***CC1101*** after this, it is only necessary to issue an `SRES` command strobe.

19.2 Crystal Control

The crystal oscillator (XOSC) is either automatically controlled or always on, if `MCSM0.XOSC_FORCE_ON` is set.

In the automatic mode, the XOSC will be turned off if the `SXOFF` or `SPWD` command strobes are issued; the state machine then goes to XOFF or SLEEP respectively. This can only be done from the IDLE state. The XOSC will be turned off when CSn is released (goes high). The XOSC will be automatically turned on again when CSn goes low. The state machine will then go to the IDLE state. The SO pin on the SPI interface must be pulled low before the SPI interface is ready to be used as described in Section 10.1.

If the XOSC is forced on, the crystal will always stay on even in the SLEEP state.

Crystal oscillator start-up time depends on crystal ESR and load capacitances. The electrical specification for the crystal oscillator can be found in Section 4.4.

19.3 Voltage Regulator Control

The voltage regulator to the digital core is controlled by the radio controller. When the chip enters the SLEEP state which is the state with the lowest current consumption, the voltage regulator is disabled. This occurs after CSn is released when a SPWD command strobe has been sent on the SPI interface. The chip is then in the SLEEP state. Setting CSn low again will turn on the regulator and crystal oscillator and make the chip enter the IDLE state.

When Wake on Radio is enabled, the WOR module will control the voltage regulator as described in Section19.5.

19.4 Active Modes (RX and TX)

CC1101 has two active modes: receive and transmit. These modes are activated directly by the MCU by using the SRX and STX command strobes, or automatically by Wake on Radio.

The frequency synthesizer must be calibrated regularly. CC1101 has one manual calibration option (using the SCAL strobe), and three automatic calibration options that are controlled by the MCSM0.FS_AUTOCAL setting:

- Calibrate when going from IDLE to either RX or TX (or FSTXON)
- Calibrate when going from either RX or TX to IDLE automatically[3]
- Calibrate every fourth time when going from either RX or TX to IDLE automatically[3]

If the radio goes from TX or RX to IDLE by issuing an SIDLE strobe, calibration will not be performed. The calibration takes a constant number of XOSC cycles; see Table 34 for timing details regarding calibration.

When RX is activated, the chip will remain in receive mode until a packet is successfully received or the RX termination timer expires (see Section 19.7). The probability that a false sync word is detected can be reduced by using PQT, CS, maximum sync word length, and sync word qualifier mode as described in Section 17. After a packet is successfully received, the radio controller goes to the state indicated by the MCSM1.RXOFF_MODE setting. The possible destinations are:

- IDLE
- FSTXON: Frequency synthesizer on and ready at the TX frequency. Activate TX with STX
- TX: Start sending preamble
- RX: Start search for a new packet

Note: When MCSM1.RXOFF_MODE=11 and a packet has been received, it will take some time before a valid RSSI value is present in the RSSI register again even if the radio has never exited RX mode. This time is the same as the RSSI response time discussed in DN505 [12].

Similarly, when TX is active the chip will remain in the TX state until the current packet has been successfully transmitted. Then the state will change as indicated by the MCSM1.TXOFF_MODE setting. The possible destinations are the same as for RX.

The MCU can manually change the state from RX to TX and vice versa by using the command strobes. If the radio controller is currently in transmit and the SRX strobe is used, the current transmission will be ended and the transition to RX will be done.

If the radio controller is in RX when the STX or SFSTXON command strobes are used, the TX-if-CCA function will be used. If the channel is not clear, the chip will remain in RX. The MCSM1.CCA_MODE setting controls the conditions for clear channel assessment. See Section 17.5 for details.

The SIDLE command strobe can always be used to force the radio controller to go to the IDLE state.

[3] Not forced in IDLE by issuing an SIDLE strobe

19.5 Wake On Radio (WOR)

The optional Wake on Radio (WOR) functionality enables CC1101 to periodically wake up from SLEEP and listen for incoming packets without MCU interaction.

When the SWOR strobe command is sent on the SPI interface, the CC1101 will go to the SLEEP state when CSn is released. The RC oscillator must be enabled before the SWOR strobe can be used, as it is the clock source for the WOR timer. The on-chip timer will set CC1101 into IDLE state and then RX state. After a programmable time in RX, the chip will go back to the SLEEP state, unless a packet is received. See Figure 28 and Section 19.7 for details on how the timeout works.

To exit WOR mode, set the CC1101 into the IDLE state

CC1101 can be set up to signal the MCU that a packet has been received by using the GDO pins. If a packet is received, the MCSM1.RXOFF_MODE will determine the behaviour at the end of the received packet. When the MCU has read the packet, it can put the chip back into SLEEP with the SWOR strobe from the IDLE state.

Note: The FIFO looses its content in the SLEEP state.

The WOR timer has two events, Event 0 and Event 1. In the SLEEP state with WOR activated, reaching Event 0 will turn on the digital regulator and start the crystal oscillator. Event 1 follows Event 0 after a programmed timeout.

The time between two consecutive Event 0 is programmed with a mantissa value given by WOREVT1.EVENT0 and WOREVT0.EVENT0, and an exponent value set by WORCTRL.WOR_RES. The equation is:

$$t_{Event0} = \frac{750}{f_{XOSC}} \cdot EVENT0 \cdot 2^{5 \cdot WOR_RES}$$

The Event 1 timeout is programmed with WORCTRL.EVENT1. Figure 28 shows the timing relationship between Event 0 timeout and Event 1 timeout.

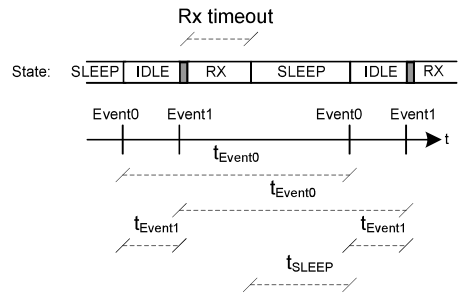

Figure 28: Event 0 and Event 1 Relationship

The time from the CC1101 enters SLEEP state until the next Event0 is programmed to appear, t_{SLEEP} in Figure 28, should be larger than 11.08 ms when using a 26 MHz crystal and 10.67 ms when a 27 MHz crystal is used. If t_{SLEEP} is less than 11.08 (10.67) ms, there is a chance that the consecutive Event 0 will occur

$$\frac{750}{f_{XOSC}} \cdot 128 \text{ seconds}$$

too early. Application Note AN047 [4] explains in detail the theory of operation and the different registers involved when using WOR, as well as highlighting important aspects when using WOR mode.

19.5.1 RC Oscillator and Timing

The frequency of the low-power RC oscillator used for the WOR functionality varies with temperature and supply voltage. In order to keep the frequency as accurate as possible, the RC oscillator will be calibrated whenever possible, which is when the XOSC is running and the chip is not in the SLEEP state. When the power and XOSC are enabled, the clock used by the WOR timer is a divided XOSC clock. When the chip goes to the sleep state, the RC oscillator will use the last valid calibration result. The frequency of the RC oscillator is locked to the main crystal frequency divided by 750.

In applications where the radio wakes up very often, typically several times every second, it is possible to do the RC oscillator calibration once and then turn off calibration to reduce the current consumption. This is done by setting WORCTRL.RC_CAL=0 and requires that RC oscillator calibration values are read from registers RCCTRL0_STATUS and RCCTRL1_STATUS and written back to

RCCTRL0 and RCCTRL1 respectively. If the RC oscillator calibration is turned off, it will have to be manually turned on again if temperature and supply voltage changes. Refer to Application Note AN047 [4] for further details.

19.6 Timing

19.6.1 Overall State Transition Times

The main radio controller needs to wait in certain states in order to make sure that the internal analog/digital parts have settled down and are ready to operate in the new states. A number of factors are important for the state transition times:

- The crystal oscillator frequency, f_{xosc}
- PA ramping enabled or not
- The data rate in cases where PA ramping is enabled
- The value of the TEST0, TEST1, and FSCAL3 registers

Table 34 shows timing in crystal clock cycles for key state transitions.

Power on time and XOSC start-up times are variable, but within the limits stated in Table 13.

Note that TX to IDLE and TX to RX transition times are functions of data rate ($f_{baudrate}$). When PA ramping is enabled (i.e. FREND0.PA_POWER≠000_b), TX to IDLE and TX to RX will require (FREND0.PA_POWER)/8·$f_{baudrate}$ longer times than the times stated in Table 34.

Description	Transition Time (no PA ramping)	Transition Time [µs]
IDLE to RX, no calibration	$1953/f_{xosc}$	75.1
IDLE to RX, with calibration	$1953/f_{xosc}$ + FS calibration Time	799
IDLE to TX/FSTXON, no calibration	$1954/f_{xosc}$	75.2
IDLE to TX/FSTXON, with calibration	$1953/f_{xosc}$ + FS calibration Time	799
TX to RX switch	$782/f_{xosc} + 0.25/f_{baudrate}$	31.1
RX to TX switch	$782/f_{xosc}$	30.1
TX to IDLE, no calibration	$\sim 0.25/f_{baudrate}$	~1
TX to IDLE, with calibration	$\sim 0.25/f_{baudrate}$ + FS calibration Time	725
RX to IDLE, no calibration	$2/f_{xosc}$	~0.1
RX to IDLE, with calibration	$2/f_{xosc}$ + FS calibration Time	724
Manual calibration	$283/f_{xosc}$ + FS calibration Time	735

Table 34: Overall State Transition Times (Example for 26 MHz crystal oscillator, 250 kBaud data rate, and TEST0 = 0x0B (maximum calibration time)).

19.6.2 Frequency Synthesizer Calibration Time

Table 35 summarizes the frequency synthesizer (FS) calibration times for possible settings of TEST0 and FSCAL3.CHP_CURR_CAL_EN. Setting FSCAL3.CHP_CURR_CAL_EN to 00_b disables the charge pump calibration stage. TEST0 is set to the values recommended by SmartRF Studio software [5]. The possible values for TEST0 when operating with different frequency bands are 0x09 and 0x0B. SmartRF Studio software [5] always sets FSCAL3.CHP_CURR_CAL_EN to 10_b.

Note that in a frequency hopping spread spectrum or a multi-channel protocol the calibration time can be reduced from 712/724 µs to 145/157 µs. This is explained in Section 28.2.

TEST0	FSCAL3.CHP_CURR_CAL_EN	FS Calibration Time f_{xosc} = 26 MHz	FS Calibration Time f_{xosc} = 27 MHz
0x09	00_b	$3764/f_{xosc}$ = 145 us	$3764/f_{xosc}$ = 139 us
0x09	10_b	$18506/f_{xosc}$ = 712 us	$18506/f_{xosc}$ = 685 us
0x0B	00_b	$4073/f_{xosc}$ = 157 us	$4073/f_{xosc}$ = 151 us
0x0B	10_b	$18815/f_{xosc}$ = 724 us	$18815/f_{xosc}$ = 697 us

Table 35: Frequency Synthesizer Calibration Times (26/27 MHz crystal)

19.7 RX Termination Timer

CC1101 has optional functions for automatic termination of RX after a programmable time. The main use for this functionality is Wake on Radio, but it may also be useful for other applications. The termination timer starts when in RX state. The timeout is programmable with the `MCSM2.RX_TIME` setting. When the timer expires, the radio controller will check the condition for staying in RX; if the condition is not met, RX will terminate.

The programmable conditions are:

- `MCSM2.RX_TIME_QUAL=0`: Continue receive if sync word has been found
- `MCSM2.RX_TIME_QUAL=1`: Continue receive if sync word has been found, or if the preamble quality is above threshold (PQT)

If the system expects the transmission to have started when enabling the receiver, the `MCSM2.RX_TIME_RSSI` function can be used. The radio controller will then terminate RX if the first valid carrier sense sample indicates no carrier (RSSI below threshold). See Section 17.4 for details on Carrier Sense.

For ASK/OOK modulation, lack of carrier sense is only considered valid after eight symbol periods. Thus, the `MCSM2.RX_TIME_RSSI` function can be used in ASK/OOK mode when the distance between "1" symbols is eight or less.

If RX terminates due to no carrier sense when the `MCSM2.RX_TIME_RSSI` function is used, or if no sync word was found when using the `MCSM2.RX_TIME` timeout function, the chip will always go back to IDLE if WOR is disabled and back to SLEEP if WOR is enabled. Otherwise, the `MCSM1.RXOFF_MODE` setting determines the state to go to when RX ends. This means that the chip will not automatically go back to SLEEP once a sync word has been received. It is therefore recommended to always wake up the microcontroller on sync word detection when using WOR mode. This can be done by selecting output signal 6 (see Table 41 on page 62) on one of the programmable GDO output pins, and programming the microcontroller to wake up on an edge-triggered interrupt from this GDO pin.

20 Data FIFO

The CC1101 contains two 64 byte FIFOs, one for received data and one for data to be transmitted. The SPI interface is used to read from the RX FIFO and write to the TX FIFO. Section 10.5 contains details on the SPI FIFO access. The FIFO controller will detect overflow in the RX FIFO and underflow in the TX FIFO.

When writing to the TX FIFO it is the responsibility of the MCU to avoid TX FIFO overflow. A TX FIFO overflow will result in an error in the TX FIFO content.

Likewise, when reading the RX FIFO the MCU must avoid reading the RX FIFO past its empty value since a RX FIFO underflow will result in an error in the data read out of the RX FIFO.

The chip status byte that is available on the SO pin while transferring the SPI header and contains the fill grade of the RX FIFO if the access is a read operation and the fill grade of the TX FIFO if the access is a write operation. Section 10.1 contains more details on this.

The number of bytes in the RX FIFO and TX FIFO can be read from the status registers `RXBYTES.NUM_RXBYTES` and `TXBYTES.NUM_TXBYTES` respectively. If a received data byte is written to the RX FIFO at the exact same time as the last byte in the RX FIFO is read over the SPI interface, the RX FIFO pointer is not properly updated and the last read byte will be duplicated. To avoid this problem, the RX FIFO should never be emptied before the last byte of the packet is received.

For packet lengths less than 64 bytes it is recommended to wait until the complete packet has been received before reading it out of the RX FIFO.

If the packet length is larger than 64 bytes, the MCU must determine how many bytes can be read from the RX FIFO (`RXBYTES.NUM_RXBYTES`-1). The following software routine can be used:

1. Read `RXBYTES.NUM_RXBYTES` repeatedly at a rate specified to be at least twice that of which RF bytes are received until the same value is returned twice; store value in *n*.
2. If *n* < # of bytes remaining in packet, read *n*-1 bytes from the RX FIFO.
3. Repeat steps 1 and 2 until *n* = # of bytes remaining in packet.
4. Read the remaining bytes from the RX FIFO.

The 4-bit `FIFOTHR.FIFO_THR` setting is used to program threshold points in the FIFOs.

Table 36 lists the 16 `FIFO_THR` settings and the corresponding thresholds for the RX and TX FIFOs. The threshold value is coded in opposite directions for the RX FIFO and TX FIFO. This gives equal margin to the overflow and underflow conditions when the threshold is reached.

FIFO_THR	Bytes in TX FIFO	Bytes in RX FIFO
0 (0000)	61	4
1 (0001)	57	8
2 (0010)	53	12
3 (0011)	49	16
4 (0100)	45	20
5 (0101)	41	24
6 (0110)	37	28
7 (0111)	33	32
8 (1000)	29	36
9 (1001)	25	40
10 (1010)	21	44
11 (1011)	17	48
12 (1100)	13	52
13 (1101)	9	56
14 (1110)	5	60
15 (1111)	1	64

Table 36: `FIFO_THR` Settings and the Corresponding FIFO Thresholds

A signal will assert when the number of bytes in the FIFO is equal to or higher than the programmed threshold. This signal can be viewed on the GDO pins (see Table 41 on page 62).

Figure 29 shows the number of bytes in both the RX FIFO and TX FIFO when the threshold signal toggles in the case of `FIFO_THR=13`. Figure 30 shows the signal on the GDO pin as the respective FIFO is filled above the threshold, and then drained below in the case of `FIFO_THR=13`.

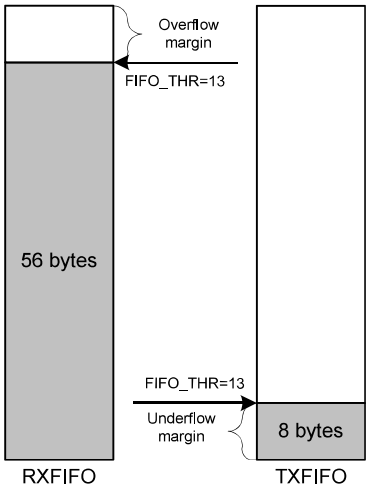

Figure 29: Example of FIFOs at Threshold

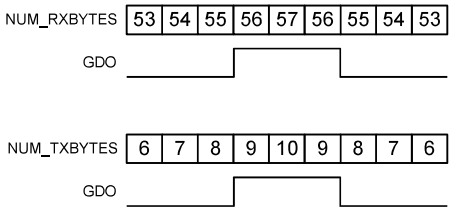

Figure 30: Number of Bytes in FIFO vs. the GDO Signal (`GDOx_CFG=0x00` in RX and `GDOx_CFG=0x02` in TX, `FIFO_THR=13`)

21 Frequency Programming

The frequency programming in ***CC1101*** is designed to minimize the programming needed in a channel-oriented system.

To set up a system with channel numbers, the desired channel spacing is programmed with the `MDMCFG0.CHANSPC_M` and `MDMCFG1.CHANSPC_E` registers. The channel spacing registers are mantissa and exponent respectively. The base or start frequency is set by the 24 bit frequency word located in the `FREQ2`, `FREQ1`, and `FREQ0` registers. This word will typically be set to the centre of the lowest channel frequency that is to be used.

The desired channel number is programmed with the 8-bit channel number register, `CHANNR.CHAN`, which is multiplied by the channel offset. The resultant carrier frequency is given by:

$$f_{carrier} = \frac{f_{XOSC}}{2^{16}} \cdot \left(FREQ + CHAN \cdot \left(\left(256 + CHANSPC_M\right) \cdot 2^{CHANSPC_E-2}\right)\right)$$

With a 26 MHz crystal the maximum channel spacing is 405 kHz. To get e.g. 1 MHz channel spacing, one solution is to use 333 kHz channel spacing and select each third channel in `CHANNR.CHAN`.

The preferred IF frequency is programmed with the `FSCTRL1.FREQ_IF` register. The IF frequency is given by:

$$f_{IF} = \frac{f_{XOSC}}{2^{10}} \cdot FREQ_IF$$

If any frequency programming register is altered when the frequency synthesizer is running, the synthesizer may give an undesired response. Hence, the frequency programming should only be updated when the radio is in the IDLE state.

22 VCO

The VCO is completely integrated on-chip.

22.1 VCO and PLL Self-Calibration

The VCO characteristics vary with temperature and supply voltage changes as well as the desired operating frequency. In order to ensure reliable operation, CC1101 includes frequency synthesizer self-calibration circuitry. This calibration should be done regularly, and must be performed after turning on power and before using a new frequency (or channel). The number of XOSC cycles for completing the PLL calibration is given in Table 34 on page 54.

The calibration can be initiated automatically or manually. The synthesizer can be automatically calibrated each time the synthesizer is turned on, or each time the synthesizer is turned off automatically. This is configured with the `MCSM0.FS_AUTOCAL` register setting. In manual mode, the calibration is initiated when the `SCAL` command strobe is activated in the IDLE mode.

Note: The calibration values are maintained in SLEEP mode, so the calibration is still valid after waking up from SLEEP mode unless supply voltage or temperature has changed significantly.

If calibration is performed *each* time before entering active mode (RX or TX) the user can program register `IOCFGx.GDOx_CFG` to 0x0A to check that the PLL is in lock. The lock detector output available on the GDOx pin should then be an interrupt for the MCU (x = 0,1, or 2). A positive transition on the GDOx pin means that the PLL is in lock. As an alternative the user can read register FSCAL1. The PLL is in lock if the register content is different from 0x3F. Refer also to the CC1101 Errata Notes [3]. The PLL must be re-calibrated until PLL lock is achieved if the PLL does not lock the first time.

If the calibration is not performed each time before entering active mode (RX or TX) the user should program register `IOCFGx.GDOx_CFG` to 0x0A to check that the PLL is in lock before receiving/transmitting data. The lock detector output available on the GDOx pin should then be an interrupt for the MCU (x = 0,1, or 2). A positive transition on the GDOx pin means that the PLL is in lock. Since the current calibration values are only valid for a finite temperature range (typically ±40C) the PLL must be re-calibrated if the lock indicator does not indicate PLL lock.

23 Voltage Regulators

CC1101 contains several on-chip linear voltage regulators that generate the supply voltages needed by low-voltage modules. These voltage regulators are invisible to the user, and can be viewed as integral parts of the various modules. The user must however make sure that the absolute maximum ratings and required pin voltages in Table 1 and Table 19 are not exceeded.

By setting the CSn pin low, the voltage regulator to the digital core turns on and the crystal oscillator starts. The SO pin on the SPI interface must go low before the first positive edge of SCLK (setup time is given in Table 22).

If the chip is programmed to enter power-down mode (`SPWD` strobe issued), the power will be turned off after CSn goes high. The power and crystal oscillator will be turned on again when CSn goes low.

The voltage regulator for the digital core requires one external decoupling capacitor.

The voltage regulator output should only be used for driving the CC1101.

24 Output Power Programming

The RF output power level from the device has two levels of programmability as illustrated in Figure 31. The special PATABLE register can hold up to eight user selected output power settings. The 3-bit FREND0.PA_POWER value selects the PATABLE entry to use. This two-level functionality provides flexible PA power ramp up and ramp down at the start and end of transmission when using 2-FSK, GFSK, 4-FSK, and MSK modulation as well as ASK modulation shaping. All the PA power settings in the PATABLE from index 0 up to the FREND0.PA_POWER value are used.

The power ramping at the start and at the end of a packet can be turned off by setting FREND0.PA_POWER=0 and then program the desired output power to index 0 in the PATABLE.

If OOK modulation is used, the logic 0 and logic 1 power levels shall be programmed to index 0 and 1 respectively.

Table 39 contains recommended PATABLE settings for various output levels and frequency bands. DN013 [15] gives the complete tables for the different frequency bands using multi-layer inductors. Using PA settings from 0x61 to 0x6F is not allowed. Table 40 contains output power and current consumption for default PATABLE setting (0xC6).

See Section 10.6 for PATABLE programming details. PATABLE must be programmed in burst mode if you want to write to other entries than PATABLE[0].

Note: All content of the PATABLE except for the first byte (index 0) is lost when entering the SLEEP state.

	868 MHz		915 MHz	
Output Power [dBm]	**Setting**	**Current Consumption, Typ. [mA]**	**Setting**	**Current Consumption, Typ. [mA]**
-30	0x03	12.0	0x03	11.9
-20	0x17	12.6	0x0E	12.5
-15	0x1D	13.3	0x1E	13.3
-10	0x26	14.5	0x27	14.8
-6	0x37	16.4	0x38	17.0
0	0x50	16.8	0x8E	17.2
5	0x86	19.9	0x84	20.2
7	0xCD	25.8	0xCC	25.7
10	0xC5	30.0	0xC3	30.7
12/11	0xC0	34.2	0xC0	33.4

Table 37: Optimum PATABLE Settings for Various Output Power Levels and Frequency Bands Using Wire-Wound Inductors in 868/915 MHz Frequency Bands

	868 MHz		915 MHz	
Default Power Setting	Output Power [dBm]	Current Consumption, Typ. [mA]	Output Power [dBm]	Current Consumption, Typ. [mA]
0xC6	9.6	29.4	8.9	28.7

Table 38: Output Power and Current Consumption for Default PATABLE Setting Using Wire-Wound Inductors in 868/915 MHz Frequency Bands

	315 MHz		433 MHz		868 MHz		915 MHz	
Output Power [dBm]	Setting	Current Consumption, Typ. [mA]	Setting	Current Consumption, Typ. [mA]	Setting	Current Consumption, Typ. [mA]	Setting	Current Consumption, Typ. [mA]
-30	0x12	10.9	0x12	11.9	0x03	12.1	0x03	12.0
-20	0x0D	11.4	0x0E	12.4	0x0F	12.7	0x0E	12.6
-15	0x1C	12.0	0x1D	13.1	0x1E	13.4	0x1E	13.4
-10	0x34	13.5	0x34	14.4	0x27	15.0	0x27	14.9
0	0x51	15.0	0x60	15.9	0x50	16.9	0x8E	16.7
5	0x85	18.3	0x84	19.4	0x81	21.0	0xCD	24.3
7	0xCB	22.1	0xC8	24.2	0xCB	26.8	0xC7	26.9
10	0xC2	26.9	0xC0	29.1	0xC2	32.4	0xC0	31.8

Table 39: Optimum PATABLE Settings for Various Output Power Levels and Frequency Bands Using Multi-layer Inductors

	315 MHz		433 MHz		868 MHz		915 MHz	
Default Power Setting	Output Power [dBm]	Current Consumption, Typ. [mA]	Output Power [dBm]	Current Consumption, Typ. [mA]	Output Power [dBm]	Current Consumption, Typ. [mA]	Output Power [dBm]	Current Consumption, Typ. [mA]
0xC6	8.5	24.4	7.8	25.2	8.5	29.5	7.2	27.4

Table 40: Output Power and Current Consumption for Default PATABLE Setting Using Multi-layer Inductors

25 Shaping and PA Ramping

With ASK modulation, up to eight power settings are used for shaping. The modulator contains a counter that counts up when transmitting a one and down when transmitting a zero. The counter counts at a rate equal to 8 times the symbol rate. The counter saturates at FREND0.PA_POWER and 0 respectively. This counter value is used as an index for a lookup in the power table. Thus, in order to utilize the whole table, FREND0.PA_POWER should be 7 when ASK is active. The shaping of the ASK signal is dependent on the configuration of the PATABLE. Figure 32 shows some examples of ASK shaping.

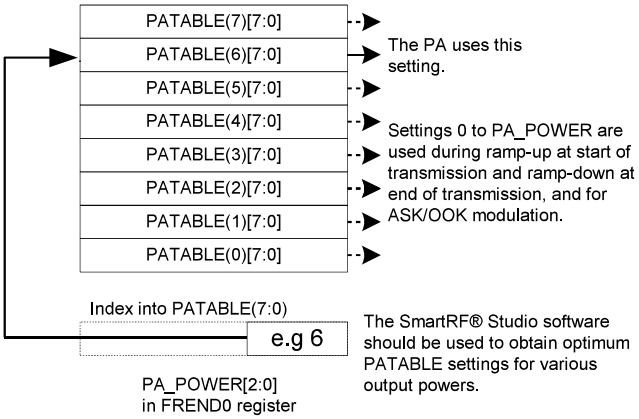

Figure 31: PA_POWER and PATABLE

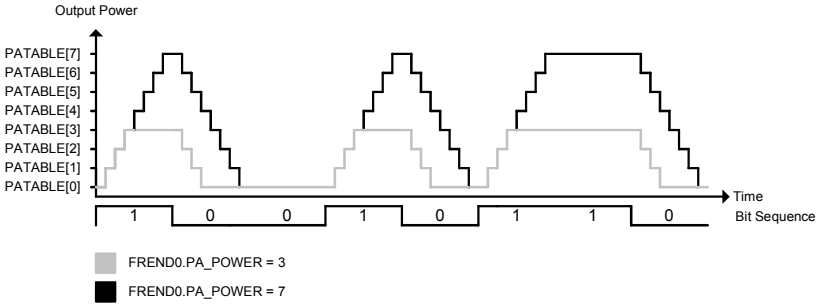

Figure 32: Shaping of ASK Signal

26 General Purpose / Test Output Control Pins

The three digital output pins GDO0, GDO1, and GDO2 are general control pins configured with `IOCFG0.GDO0_CFG`, `IOCFG1.GDO1_CFG`, and `IOCFG2.GDO2_CFG` respectively. Table 41 shows the different signals that can be monitored on the GDO pins. These signals can be used as inputs to the MCU.

GDO1 is the same pin as the SO pin on the SPI interface, thus the output programmed on this pin will only be valid when CSn is high. The default value for GDO1 is 3-stated which is useful when the SPI interface is shared with other devices.

The default value for GDO0 is a 135-141 kHz clock output (XOSC frequency divided by 192). Since the XOSC is turned on at power-on-reset, this can be used to clock the MCU in systems with only one crystal. When the MCU is up and running, it can change the clock frequency by writing to `IOCFG0.GDO0_CFG`.

An on-chip analog temperature sensor is enabled by writing the value 128 (0x80) to the `IOCFG0` register. The voltage on the GDO0 pin is then proportional to temperature. See Section 4.7 for temperature sensor specifications.

If the `IOCFGx.GDOx_CFG` setting is less than 0x20 and `IOCFGx_GDOx_INV` is 0 (1), the GDO0 and GDO2 pins will be hardwired to 0 (1), and the GDO1 pin will be hardwired to 1 (0) in the SLEEP state. These signals will be hardwired until the `CHIP_RDYn` signal goes low.

If the `IOCFGx.GDOx_CFG` setting is 0x20 or higher, the GDO pins will work as programmed also in SLEEP state. As an example, GDO1 is high impedance in all states if `IOCFG1.GDO1_CFG=0x2E`.

GDOx_CFG[5:0]	Description
0 (0x00)	Associated to the RX FIFO: Asserts when RX FIFO is filled at or above the RX FIFO threshold. De-asserts when RX FIFO is drained below the same threshold.
1 (0x01)	Associated to the RX FIFO: Asserts when RX FIFO is filled at or above the RX FIFO threshold or the end of packet is reached. De-asserts when the RX FIFO is empty.
2 (0x02)	Associated to the TX FIFO: Asserts when the TX FIFO is filled at or above the TX FIFO threshold. De-asserts when the TX FIFO is below the same threshold.
3 (0x03)	Associated to the TX FIFO: Asserts when TX FIFO is full. De-asserts when the TX FIFO is drained below the TX FIFO threshold.
4 (0x04)	Asserts when the RX FIFO has overflowed. De-asserts when the FIFO has been flushed.
5 (0x05)	Asserts when the TX FIFO has underflowed. De-asserts when the FIFO is flushed.
6 (0x06)	Asserts when sync word has been sent / received, and de-asserts at the end of the packet. In RX, the pin will also de-assert when a packet is discarded due to address or maximum length filtering or when the radio enters RXFIFO_OVERFLOW state. In TX the pin will de-assert if the TX FIFO underflows.
7 (0x07)	Asserts when a packet has been received with CRC OK. De-asserts when the first byte is read from the RX FIFO.
8 (0x08)	Preamble Quality Reached. Asserts when the PQI is above the programmed PQT value. De-asserted when the chip re-enters RX state (`MARCSTATE=0x0D`) or the PQI gets below the programmed PQT value.
9 (0x09)	Clear channel assessment. High when RSSI level is below threshold (dependent on the current CCA_MODE setting).
10 (0x0A)	Lock detector output. The PLL is in lock if the lock detector output has a positive transition or is constantly logic high. To check for PLL lock the lock detector output should be used as an interrupt for the MCU.
11 (0x0B)	Serial Clock. Synchronous to the data in synchronous serial mode. In RX mode, data is set up on the falling edge by CC1101 when `GDOx_INV=0`. In TX mode, data is sampled by CC1101 on the rising edge of the serial clock when `GDOx_INV=0`.
12 (0x0C)	Serial Synchronous Data Output. Used for synchronous serial mode.
13 (0x0D)	Serial Data Output. Used for asynchronous serial mode.
14 (0x0E)	Carrier sense. High if RSSI level is above threshold. Cleared when entering IDLE mode.
15 (0x0F)	CRC_OK. The last CRC comparison matched. Cleared when entering/restarting RX mode.
16 (0x10) to 21 (0x15)	Reserved – used for test
22 (0x16)	RX_HARD_DATA[1]. Can be used together with RX_SYMBOL_TICK for alternative serial RX output.
23 (0x17)	RX_HARD_DATA[0]. Can be used together with RX_SYMBOL_TICK for alternative serial RX output.
24 (0x18) to 26 (0x1A)	Reserved – used for test
27 (0x1B)	PA_PD. **Note**: PA_PD will have the same signal level in SLEEP and TX states. To control an external PA or RX/TX switch in applications where the SLEEP state is used it is recommended to use `GDOx_CFGx=0x2F` instead.
28 (0x1C)	LNA_PD. **Note:** LNA_PD will have the same signal level in SLEEP and RX states. To control an external LNA or RX/TX switch in applications where the SLEEP state is used it is recommended to use `GDOx_CFGx=0x2F` instead.
29 (0x1D)	RX_SYMBOL_TICK. Can be used together with RX_HARD_DATA for alternative serial RX output.
30 (0x1E) to 35 (0x23)	Reserved – used for test
36 (0x24)	WOR_EVNT0
37 (0x25)	WOR_EVNT1
38 (0x26)	CLK_256
39 (0x27)	CLK_32k
40 (0x28)	Reserved – used for test
41 (0x29)	CHIP_RDYn
42 (0x2A)	Reserved – used for test
43 (0x2B)	XOSC_STABLE
44 (0x2C)	Reserved – used for test
45 (0x2D)	Reserved – used for test
46 (0x2E)	High impedance (3-state)
47 (0x2F)	HW to 0 (HW1 achieved by setting `GDOx_INV=1`). Can be used to control an external LNA/PA or RX/TX switch.
48 (0x30)	CLK_XOSC/1
49 (0x31)	CLK_XOSC/1.5
50 (0x32)	CLK_XOSC/2
51 (0x33)	CLK_XOSC/3
52 (0x34)	CLK_XOSC/4
53 (0x35)	CLK_XOSC/6
54 (0x36)	CLK_XOSC/8
55 (0x37)	CLK_XOSC/12
56 (0x38)	CLK_XOSC/16
57 (0x39)	CLK_XOSC/24
58 (0x3A)	CLK_XOSC/32
59 (0x3B)	CLK_XOSC/48
60 (0x3C)	CLK_XOSC/64
61 (0x3D)	CLK_XOSC/96
62 (0x3E)	CLK_XOSC/128
63 (0x3F)	CLK_XOSC/192

Note: There are 3 GDO pins, but only one CLK_XOSC/n can be selected as an output at any time. If CLK_XOSC/n is to be monitored on one of the GDO pins, the other two GDO pins must be configured to values less than 0x30. The GDO0 default value is CLK_XOSC/192.

To optimize RF performance, these signals should not be used while the radio is in RX or TX mode.

Table 41: GDOx Signal Selection (x = 0, 1, or 2)

27 Asynchronous and Synchronous Serial Operation

Several features and modes of operation have been included in the CC1101 to provide backward compatibility with previous Chipcon products and other existing RF communication systems. For new systems, it is recommended to use the built-in packet handling features, as they can give more robust communication, significantly offload the microcontroller, and simplify software development.

27.1 Asynchronous Serial Operation

Asynchronous transfer is included in the CC1101 for backward compatibility with systems that are already using the asynchronous data transfer.

When asynchronous transfer is enabled, several of the support mechanisms for the MCU that are included in CC1101 will be disabled, such as packet handling hardware, buffering in the FIFO, and so on. The asynchronous transfer mode does not allow for the use of the data whitener, interleaver, and FEC, and it is not possible to use Manchester encoding. MSK is not supported for asynchronous transfer.

Setting `PKTCTRL0.PKT_FORMAT` to 3 enables asynchronous serial mode. In TX, the GDO0 pin is used for data input (TX data). Data output can be on GDO0, GDO1, or GDO2. This is set by the `IOCFG0.GDO0_CFG`, `IOCFG1.GDO1_CFG` and `IOCFG2.GDO2_CFG` fields.

The CC1101 modulator samples the level of the asynchronous input 8 times faster than the programmed data rate. The timing requirement for the asynchronous stream is that the error in the bit period must be less than one eighth of the programmed data rate.

In asynchronous serial mode no data decision is done on-chip and the raw data is put on the data output line in RX. When using asynchronous serial mode make sure the interfacing MCU does proper oversampling and that it can handle the jitter on the data output line. The MCU should tolerate a jitter of ±1/8 of a bit period as the data stream is time-discrete using 8 samples per bit.

In asynchronous serial mode there will be glitches of 37 - 38.5 ns duration (1/XOSC) occurring infrequently and with random periods. A simple RC filter can be added to the data output line between CC1101 and the MCU to get rid of the 37 - 38.5 ns ns glitches if considered a problem. The filter 3 dB cut-off frequency needs to be high enough so that the data is not filtered and at the same time low enough to remove the glitch. As an example, for 2.4 kBaud data rate a 1 kohm resistor and 2.7 nF capacitor can be used. This gives a 3 dB cut-off frequency of 59 kHz.

27.2 Synchronous Serial Operation

Setting `PKTCTRL0.PKT_FORMAT` to 1 enables synchronous serial mode. In the synchronous serial mode, data is transferred on a two-wire serial interface. The CC1101 provides a clock that is used to set up new data on the data input line or sample data on the data output line. Data input (TX data) is on the GDO0 pin. This pin will automatically be configured as an input when TX is active. The TX latency is 8 bits. The data output pin can be any of the GDO pins. This is set by the `IOCFG0.GDO0_CFG`, `IOCFG1.GDO1_CFG`, and `IOCFG2.GDO2_CFG` fields. Time from start of reception until data is available on the receiver data output pin is equal to 9 bit.

Preamble and sync word insertion/detection may or may not be active, dependent on the sync mode set by the `MDMCFG2.SYNC_MODE`.

If preamble and sync word is disabled, all other packet handler features and FEC should also be disabled. The MCU must then handle preamble and sync word insertion and detection in software.

If preamble and sync word insertion/detection are left on, all packet handling features and FEC can be used. One exception is that the address filtering feature is unavailable in synchronous serial mode.

When using the packet handling features in synchronous serial mode, the CC1101 will insert and detect the preamble and sync word and the MCU will only provide/get the data payload. This is equivalent to the recommended FIFO operation mode.

An alternative serial RX output option is to configure any of the GD0 pins for

RX_SYMBOL_TICK and RX_HARD_DATA, see Table 41. RX_HARD_DATA[1:0] is the hard decision symbol. RX_HARD_DATA[1:0] contain data for 4-ary modulation formats while RX_HARD_DATA[1] contain data for 2-ary modulation formats. The RX_SYMBOL_TICK signal is the symbol clock and is high for one half symbol period whenever a new symbol is presented on the hard and soft data outputs. This option may be used for both synchronous and asynchronous interfaces.

28 System Considerations and Guidelines

28.1 SRD Regulations

International regulations and national laws regulate the use of radio receivers and transmitters. Short Range Devices (SRDs) for license free operation below 1 GHz are usually operated in the 315 MHz, 433 MHz, 868 MHz or 915 MHz frequency bands. The CC1101 is specifically designed for such use with its 300 - 348 MHz, 387 - 464 MHz, and 779 - 928 MHz operating ranges. The most important regulations when using the CC1101 in the 315 MHz, 433 MHz, 868 MHz, or 915 MHz frequency bands are EN 300 220 (Europe) and FCC CFR47 Part 15 (USA).

For compliance with modulation bandwidth requirements under EN 300 220 in the 863 to 870 MHz frequency range it is recommended to use a 26 MHz crystal for frequencies below 869 MHz and a 27 MHz crystal for frequencies above 869 MHz.

Please note that compliance with regulations is dependent on the complete system performance. It is the customer's responsibility to ensure that the system complies with regulations.

28.2 Frequency Hopping and Multi-Channel Systems

The 315 MHz, 433 MHz, 868 MHz, or 915 MHz bands are shared by many systems both in industrial, office, and home environments. It is therefore recommended to use frequency hopping spread spectrum (FHSS) or a multi-channel protocol because the frequency diversity makes the system more robust with respect to interference from other systems operating in the same frequency band. FHSS also combats multipath fading.

CC1101 is highly suited for FHSS or multi-channel systems due to its agile frequency synthesizer and effective communication interface. Using the packet handling support and data buffering is also beneficial in such systems as these features will significantly offload the host controller.

Charge pump current, VCO current, and VCO capacitance array calibration data is required for each frequency when implementing frequency hopping for CC1101. There are 3 ways of obtaining the calibration data from the chip:

1) Frequency hopping with calibration for each hop. The PLL calibration time is 712/724 µs (26 MHz crystal and TEST0 = 0x09/0B, see Table 35). The blanking interval between each frequency hop is then 787/799 µs.

2) Fast frequency hopping without calibration for each hop can be done by performing the necessary calibrating at startup and saving the resulting FSCAL3, FSCAL2, and FSCAL1 register values in MCU memory. The VCO capacitance calibration FSCAL1 register value must be found for each RF frequency to be used. The VCO current calibration value and the charge pump current calibration value available in FSCAL2 and FSCAL3 respectively are not dependent on the RF frequency, so the same value can therefore be used for all RF frequencies for these two registers. Between each frequency hop, the calibration process can then be replaced by writing the FSCAL3, FSCAL2 and FSCAL1 register values that corresponds to the next RF frequency. The PLL turn on time is approximately 75 µs (Table 34). The blanking interval between each frequency hop is then approximately 75 µs.

3) Run calibration on a single frequency at startup. Next write 0 to FSCAL3[5:4] to disable the charge pump calibration. After writing to FSCAL3[5:4], strobe SRX (or STX) with MCSM0.FS_AUTOCAL=1 for each new frequency hop. That is, VCO current and VCO capacitance calibration is done, but not charge pump current calibration. When charge pump current calibration is disabled the calibration

time is reduced from 712/724 µs to 145/157 µs (26 MHz crystal and TEST0 = 0x09/0B, see Table 35). The blanking interval between each frequency hop is then 220/232 µs.

There is a trade off between blanking time and memory space needed for storing calibration data in non-volatile memory. Solution 2) above gives the shortest blanking interval, but requires more memory space to store calibration values. This solution also requires that the supply voltage and temperature do not vary much in order to have a robust solution. Solution 3) gives 567 µs smaller blanking interval than solution 1).

The recommended settings for TEST0.VCO_SEL_CAL_EN change with frequency. This means that one should always use SmartRF Studio [5] to get the correct settings for a specific frequency before doing a calibration, regardless of which calibration method is being used.

Note: The content in the TEST0 register is not retained in SLEEP state, thus it is necessary to re-write this register when returning from the SLEEP state.

28.3 Wideband Modulation when not Using Spread Spectrum

Digital modulation systems under FCC Section 15.247 include 2-FSK, GFSK, and 4-FSK modulation. A maximum peak output power of 1 W (+30 dBm) is allowed if the 6 dB bandwidth of the modulated signal exceeds 500 kHz. In addition, the peak power spectral density conducted to the antenna shall not be greater than +8 dBm in any 3 kHz band.

Operating at high data rates and frequency separation, the CC1101 is suited for systems targeting compliance with digital modulation system as defined by FCC Section 15.247. An external power amplifier such as CC1190 [21] is needed to increase the output above +11 dBm. Please refer to DN006 [11] for further details concerning wideband modulation using CC1101 and DN036 for wideband modulation at 600 kbps data rate, +19 dBm output power when using CC1101+CC1101 [25].

28.4 Wireless MBUS

The wireless MBUS standard is a communication standard for meters and wireless readout of meters, and specifies the physical and the data link layer. Power consumption is a critical parameter for the meter side, since the communication link shall be operative for the full lifetime of the meter, without changing the battery. CC1101 combined with MSP430 is an excellent choice for the Wireless MBUS standard, CC1101 is a truly low cost, low power and flexible transceiver, and MSP430 a high performance and low power MCU. For more informati on regarding using CC1101 for Wireless MBUS applications, see AN067 [14].

Since the Wireless MBUS standard operates in the 868-870 ISM band, the radio requirements must also comply with the ETSI EN 300 220 and CEPT/ERC/REC 70-03 E standards.

28.5 Data Burst Transmissions

The high maximum data rate of CC1101 opens up for burst transmissions. A low average data rate link (e.g. 10 kBaud) can be realized by using a higher over-the-air data rate. Buffering the data and transmitting in bursts at high data rate (e.g. 500 kBaud) will reduce the time in active mode, and hence also reduce the average current consumption significantly. Reducing the time in active mode will reduce the likelihood of collisions with other systems in the same frequency range.

Note: The sensitivity and thus transmission range is reduced for high data rate bursts compared to lower data rates.

28.6 Continuous Transmissions

In data streaming applications, the CC1101 opens up for continuous transmissions at 500 kBaud effective data rate. As the modulation is done with a closed loop PLL, there is no limitation in the length of a transmission (open loop modulation used in some transceivers

often prevents this kind of continuous data streaming and reduces the effective data rate).

28.7 Battery Operated Systems

In low power applications, the SLEEP state with the crystal oscillator core switched off should be used when the CC1101 is not active. It is possible to leave the crystal oscillator core running in the SLEEP state if start-up time is critical. The WOR functionality should be used in low power applications.

28.8 Increasing Range

In some applications it may be necessary to extend the range. The CC1190 [21] is a range extender for 850-950 MHz RF transceivers, transmitters, and System-on-Chip devices from Texas Instruments. It increases the link budget by providing a power amplifier (PA) for increased output power, and a low-noise amplifier (LNA) with low noise figure for improved receiver sensitivity in addition to switches and RF matching for simple design of high performance wireless systems. Refer to AN094 [22] and AN096 [23] for performance figures of the CC1101 + CC1190 combination.

Figure 33 shows a simplified application circuit.

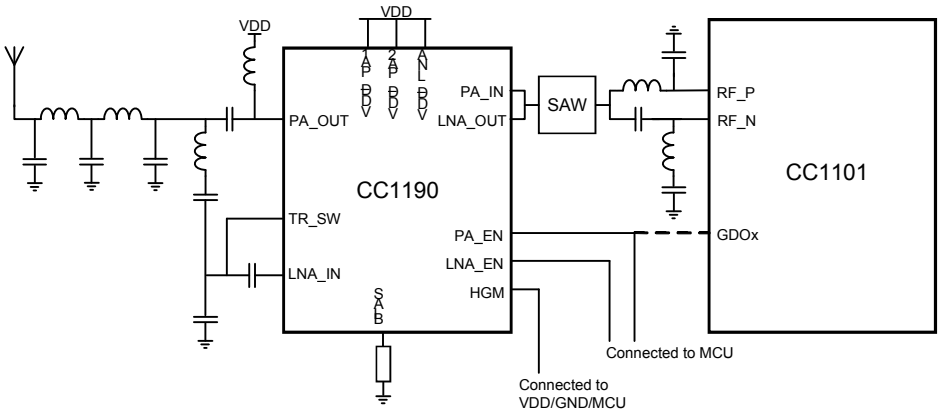

Figure 33: Simplified CC1101-CC1190 Application Circuit

29 Configuration Registers

The configuration of CC1101 is done by programming 8-bit registers. The optimum configuration data based on selected system parameters are most easily found by using the SmartRF Studio software [5]. Complete descriptions of the registers are given in the following tables. After chip reset, all the registers have default values as shown in the tables. The optimum register setting might differ from the default value. After a reset, all registers that shall be different from the default value therefore needs to be programmed through the SPI interface.

There are 13 command strobe registers, listed in Table 42. Accessing these registers will initiate the change of an internal state or mode. There are 47 normal 8-bit configuration registers listed in Table 43. Many of these registers are for test purposes only, and need not be written for normal operation of CC1101.

There are also 12 status registers that are listed in Table 44. These registers, which are read-only, contain information about the status of CC1101.

The two FIFOs are accessed through one 8-bit register. Write operations write to the TX FIFO, while read operations read from the RX FIFO.

During the header byte transfer and while writing data to a register or the TX FIFO, a status byte is returned on the SO line. This status byte is described in Table 23 on page 31.

Table 45 summarizes the SPI address space. The address to use is given by adding the base address to the left and the burst and read/write bits on the top. Note that the burst bit has different meaning for base addresses above and below 0x2F.

Address	Strobe Name	Description
0x30	SRES	Reset chip.
0x31	SFSTXON	Enable and calibrate frequency synthesizer (if `MCSM0.FS_AUTOCAL`=1). If in RX (with CCA): Go to a wait state where only the synthesizer is running (for quick RX / TX turnaround).
0x32	SXOFF	Turn off crystal oscillator.
0x33	SCAL	Calibrate frequency synthesizer and turn it off. `SCAL` can be strobed from IDLE mode without setting manual calibration mode (`MCSM0.FS_AUTOCAL`=0)
0x34	SRX	Enable RX. Perform calibration first if coming from IDLE and `MCSM0.FS_AUTOCAL`=1.
0x35	STX	In IDLE state: Enable TX. Perform calibration first if `MCSM0.FS_AUTOCAL`=1. If in RX state and CCA is enabled: Only go to TX if channel is clear.
0x36	SIDLE	Exit RX / TX, turn off frequency synthesizer and exit Wake-On-Radio mode if applicable.
0x38	SWOR	Start automatic RX polling sequence (Wake-on-Radio) as described in Section 19.5 if `WORCTRL.RC_PD=0`.
0x39	SPWD	Enter power down mode when CSn goes high.
0x3A	SFRX	Flush the RX FIFO buffer. Only issue `SFRX` in IDLE or RXFIFO_OVERFLOW states.
0x3B	SFTX	Flush the TX FIFO buffer. Only issue `SFTX` in IDLE or TXFIFO_UNDERFLOW states.
0x3C	SWORRST	Reset real time clock to Event1 value.
0x3D	SNOP	No operation. May be used to get access to the chip status byte.

Table 42: Command Strobes

Address	Register	Description	Preserved in SLEEP State	Details on Page Number
0x00	IOCFG2	GDO2 output pin configuration	Yes	71
0x01	IOCFG1	GDO1 output pin configuration	Yes	71
0x02	IOCFG0	GDO0 output pin configuration	Yes	71
0x03	FIFOTHR	RX FIFO and TX FIFO thresholds	Yes	72
0x04	SYNC1	Sync word, high byte	Yes	73
0x05	SYNC0	Sync word, low byte	Yes	73
0x06	PKTLEN	Packet length	Yes	73
0x07	PKTCTRL1	Packet automation control	Yes	73
0x08	PKTCTRL0	Packet automation control	Yes	74
0x09	ADDR	Device address	Yes	74
0x0A	CHANNR	Channel number	Yes	74
0x0B	FSCTRL1	Frequency synthesizer control	Yes	75
0x0C	FSCTRL0	Frequency synthesizer control	Yes	75
0x0D	FREQ2	Frequency control word, high byte	Yes	75
0x0E	FREQ1	Frequency control word, middle byte	Yes	75
0x0F	FREQ0	Frequency control word, low byte	Yes	75
0x10	MDMCFG4	Modem configuration	Yes	76
0x11	MDMCFG3	Modem configuration	Yes	76
0x12	MDMCFG2	Modem configuration	Yes	77
0x13	MDMCFG1	Modem configuration	Yes	78
0x14	MDMCFG0	Modem configuration	Yes	78
0x15	DEVIATN	Modem deviation setting	Yes	79
0x16	MCSM2	Main Radio Control State Machine configuration	Yes	80
0x17	MCSM1	Main Radio Control State Machine configuration	Yes	81
0x18	MCSM0	Main Radio Control State Machine configuration	Yes	82
0x19	FOCCFG	Frequency Offset Compensation configuration	Yes	83
0x1A	BSCFG	Bit Synchronization configuration	Yes	84
0x1B	AGCTRL2	AGC control	Yes	85
0x1C	AGCTRL1	AGC control	Yes	86
0x1D	AGCTRL0	AGC control	Yes	87
0x1E	WOREVT1	High byte Event 0 timeout	Yes	87
0x1F	WOREVT0	Low byte Event 0 timeout	Yes	88
0x20	WORCTRL	Wake On Radio control	Yes	88
0x21	FREND1	Front end RX configuration	Yes	89
0x22	FREND0	Front end TX configuration	Yes	89
0x23	FSCAL3	Frequency synthesizer calibration	Yes	89
0x24	FSCAL2	Frequency synthesizer calibration	Yes	90
0x25	FSCAL1	Frequency synthesizer calibration	Yes	90
0x26	FSCAL0	Frequency synthesizer calibration	Yes	90
0x27	RCCTRL1	RC oscillator configuration	Yes	90
0x28	RCCTRL0	RC oscillator configuration	Yes	90
0x29	FSTEST	Frequency synthesizer calibration control	No	91
0x2A	PTEST	Production test	No	91
0x2B	AGCTEST	AGC test	No	91
0x2C	TEST2	Various test settings	No	91
0x2D	TEST1	Various test settings	No	91
0x2E	TEST0	Various test settings	No	92

Table 43: Configuration Registers Overview

Address	Register	Description	Details on page number
0x30 (0xF0)	PARTNUM	Part number for CC1101	92
0x31 (0xF1)	VERSION	Current version number	92
0x32 (0xF2)	FREQEST	Frequency Offset Estimate	92
0x33 (0xF3)	LQI	Demodulator estimate for Link Quality	92
0x34 (0xF4)	RSSI	Received signal strength indication	92
0x35 (0xF5)	MARCSTATE	Control state machine state	93
0x36 (0xF6)	WORTIME1	High byte of WOR timer	93
0x37 (0xF7)	WORTIME0	Low byte of WOR timer	93
0x38 (0xF8)	PKTSTATUS	Current GDOx status and packet status	94
0x39 (0xF9)	VCO_VC_DAC	Current setting from PLL calibration module	94
0x3A (0xFA)	TXBYTES	Underflow and number of bytes in the TX FIFO	94
0x3B (0xFB)	RXBYTES	Overflow and number of bytes in the RX FIFO	94
0x3C (0xFC)	RCCTRL1_STATUS	Last RC oscillator calibration result	94
0x3D (0xFD)	RCCTRL0_STATUS	Last RC oscillator calibration result	95

Table 44: Status Registers Overview

Table 45: SPI Address Space (see next page)

	Write		Read		
	Single Byte	Burst	Single Byte	Burst	
	+0x00	+0x40	+0x80	+0xC0	
0x00	IOCFG2				R/W configuration registers, burst access possible
0x01	IOCFG1				
0x02	IOCFG0				
0x03	FIFOTHR				
0x04	SYNC1				
0x05	SYNC0				
0x06	PKTLEN				
0x07	PKTCTRL1				
0x08	PKTCTRL0				
0x09	ADDR				
0x0A	CHANNR				
0x0B	FSCTRL1				
0x0C	FSCTRL0				
0x0D	FREQ2				
0x0E	FREQ1				
0x0F	FREQ0				
0x10	MDMCFG4				
0x11	MDMCFG3				
0x12	MDMCFG2				
0x13	MDMCFG1				
0x14	MDMCFG0				
0x15	DEVIATN				
0x16	MCSM2				
0x17	MCSM1				
0x18	MCSM0				
0x19	FOCCFG				
0x1A	BSCFG				
0x1B	AGCCTRL2				
0x1C	AGCCTRL1				
0x1D	AGCCTRL0				
0x1E	WOREVT1				
0x1F	WOREVT0				
0x20	WORCTRL				
0x21	FREND1				
0x22	FREND0				
0x23	FSCAL3				
0x24	FSCAL2				
0x25	FSCAL1				
0x26	FSCAL0				
0x27	RCCTRL1				
0x28	RCCTRL0				
0x29	FSTEST				
0x2A	PTEST				
0x2B	AGCTEST				
0x2C	TEST2				
0x2D	TEST1				
0x2E	TEST0				
0x2F					
0x30	SRES		SRES	PARTNUM	Command Strobes, Status registers (read only) and multi byte registers
0x31	SFSTXON		SFSTXON	VERSION	
0x32	SXOFF		SXOFF	FREQEST	
0x33	SCAL		SCAL	LQI	
0x34	SRX		SRX	RSSI	
0x35	STX		STX	MARCSTATE	
0x36	SIDLE		SIDLE	WORTIME1	
0x37				WORTIME0	
0x38	SWOR		SWOR	PKTSTATUS	
0x39	SPWD		SPWD	VCO_VC_DAC	
0x3A	SFRX		SFRX	TXBYTES	
0x3B	SFTX		SFTX	RXBYTES	
0x3C	SWORRST		SWORRST	RCCTRL1_STATUS	
0x3D	SNOP		SNOP	RCCTRL0_STATUS	
0x3E	PATABLE	PATABLE	PATABLE	PATABLE	
0x3F	TX FIFO	TX FIFO	RX FIFO	RX FIFO	

29.1 Configuration Register Details – Registers with preserved values in SLEEP state

0x00: IOCFG2 – GDO2 Output Pin Configuration

Bit	Field Name	Reset	R/W	Description
7			R0	Not used
6	GDO2_INV	0	R/W	Invert output, i.e. select active low (1) / high (0)
5:0	GDO2_CFG[5:0]	41 (0x29)	R/W	Default is CHP_RDYn (See Table 41 on page 62).

0x01: IOCFG1 – GDO1 Output Pin Configuration

Bit	Field Name	Reset	R/W	Description
7	GDO_DS	0	R/W	Set high (1) or low (0) output drive strength on the GDO pins.
6	GDO1_INV	0	R/W	Invert output, i.e. select active low (1) / high (0)
5:0	GDO1_CFG[5:0]	46 (0x2E)	R/W	Default is 3-state (See Table 41 on page 62).

0x02: IOCFG0 – GDO0 Output Pin Configuration

Bit	Field Name	Reset	R/W	Description
7	TEMP_SENSOR_ENABLE	0	R/W	Enable analog temperature sensor. Write 0 in all other register bits when using temperature sensor.
6	GDO0_INV	0	R/W	Invert output, i.e. select active low (1) / high (0)
5:0	GDO0_CFG[5:0]	63 (0x3F)	R/W	Default is CLK_XOSC/192 (See Table 41 on page 62). It is recommended to disable the clock output in initialization, in order to optimize RF performance.

0x03: FIFOTHR – RX FIFO and TX FIFO Thresholds

<table>
<tr><th>Bit</th><th>Field Name</th><th>Reset</th><th>R/W</th><th>Description</th></tr>
<tr><td>7</td><td></td><td>0</td><td>R/W</td><td>Reserved , write 0 for compatibility with possible future extensions</td></tr>
<tr><td>6</td><td>ADC_RETENTION</td><td>0</td><td>R/W</td><td>0: TEST1 = 0x31 and TEST2= 0x88 when waking up from SLEEP
1: TEST1 = 0x35 and TEST2 = 0x81 when waking up from SLEEP
Note that the changes in the TEST registers due to the ADC_RETENTION bit setting are only seen INTERNALLY in the analog part. The values read from the TEST registers when waking up from SLEEP mode will always be the reset value.
The ADC_RETENTION bit should be set to 1before going into SLEEP mode if settings with an RX filter bandwidth below 325 kHz are wanted at time of wake-up.</td></tr>
<tr><td>5:4</td><td>CLOSE_IN_RX [1:0]</td><td>0 (00)</td><td>R/W</td><td>For more details, please see DN010 [8]
<table>
<tr><th>Setting</th><th>RX Attenuation, Typical Values</th></tr>
<tr><td>0 (00)</td><td>0 dB</td></tr>
<tr><td>1 (01)</td><td>6 dB</td></tr>
<tr><td>2 (10)</td><td>12 dB</td></tr>
<tr><td>3 (11)</td><td>18 dB</td></tr>
</table></td></tr>
<tr><td>3:0</td><td>FIFO_THR[3:0]</td><td>7 (0111)</td><td>R/W</td><td>Set the threshold for the TX FIFO and RX FIFO. The threshold is exceeded when the number of bytes in the FIFO is equal to or higher than the threshold value.
<table>
<tr><th>Setting</th><th>Bytes in TX FIFO</th><th>Bytes in RX FIFO</th></tr>
<tr><td>0 (0000)</td><td>61</td><td>4</td></tr>
<tr><td>1 (0001)</td><td>57</td><td>8</td></tr>
<tr><td>2 (0010)</td><td>53</td><td>12</td></tr>
<tr><td>3 (0011)</td><td>49</td><td>16</td></tr>
<tr><td>4 (0100)</td><td>45</td><td>20</td></tr>
<tr><td>5 (0101)</td><td>41</td><td>24</td></tr>
<tr><td>6 (0110)</td><td>37</td><td>28</td></tr>
<tr><td>7 (0111)</td><td>33</td><td>32</td></tr>
<tr><td>8 (1000)</td><td>29</td><td>36</td></tr>
<tr><td>9 (1001)</td><td>25</td><td>40</td></tr>
<tr><td>10 (1010)</td><td>21</td><td>44</td></tr>
<tr><td>11 (1011)</td><td>17</td><td>48</td></tr>
<tr><td>12 (1100)</td><td>13</td><td>52</td></tr>
<tr><td>13 (1101)</td><td>9</td><td>56</td></tr>
<tr><td>14 (1110)</td><td>5</td><td>60</td></tr>
<tr><td>15 (1111)</td><td>1</td><td>64</td></tr>
</table></td></tr>
</table>

0x04: SYNC1 – Sync Word, High Byte

Bit	Field Name	Reset	R/W	Description
7:0	SYNC[15:8]	211 (0xD3)	R/W	8 MSB of 16-bit sync word

0x05: SYNC0 – Sync Word, Low Byte

Bit	Field Name	Reset	R/W	Description
7:0	SYNC[7:0]	145 (0x91)	R/W	8 LSB of 16-bit sync word

0x06: PKTLEN – Packet Length

Bit	Field Name	Reset	R/W	Description
7:0	PACKET_LENGTH	255 (0xFF)	R/W	Indicates the packet length when fixed packet length mode is enabled. If variable packet length mode is used, this value indicates the maximum packet length allowed. This value must be different from 0.

0x07: PKTCTRL1 – Packet Automation Control

Bit	Field Name	Reset	R/W	Description
7:5	PQT[2:0]	0 (0x00)	R/W	Preamble quality estimator threshold. The preamble quality estimator increases an internal counter by one each time a bit is received that is different from the previous bit, and decreases the counter by 8 each time a bit is received that is the same as the last bit. A threshold of 4·`PQT` for this counter is used to gate sync word detection. When `PQT=0` a sync word is always accepted.
4		0	R0	Not Used.
3	CRC_AUTOFLUSH	0	R/W	Enable automatic flush of RX FIFO when CRC is not OK. This requires that only one packet is in the RXIFIFO and that packet length is limited to the RX FIFO size.
2	APPEND_STATUS	1	R/W	When enabled, two status bytes will be appended to the payload of the packet. The status bytes contain RSSI and LQI values, as well as CRC OK.
1:0	ADR_CHK[1:0]	0 (00)	R/W	Controls address check configuration of received packages. Setting: Address check configuration 0 (00): No address check 1 (01): Address check, no broadcast 2 (10): Address check and 0 (0x00) broadcast 3 (11): Address check and 0 (0x00) and 255 (0xFF) broadcast

0x08: PKTCTRL0 – Packet Automation Control

Bit	Field Name	Reset	R/W	Description
7			R0	Not used
6	WHITE_DATA	1	R/W	Turn data whitening on / off 0: Whitening off 1: Whitening on
5:4	PKT_FORMAT[1:0]	0 (00)	R/W	Format of RX and TX data Setting: Packet format 0 (00): Normal mode, use FIFOs for RX and TX 1 (01): Synchronous serial mode, Data in on GDO0 and data out on either of the GDOx pins 2 (10): Random TX mode; sends random data using PN9 generator. Used for test. Works as normal mode, setting 0 (00), in RX 3 (11): Asynchronous serial mode, Data in on GDO0 and data out on either of the GDOx pins
3		0	R0	Not used
2	CRC_EN	1	R/W	1: CRC calculation in TX and CRC check in RX enabled 0: CRC disabled for TX and RX
1:0	LENGTH_CONFIG[1:0]	1 (01)	R/W	Configure the packet length Setting: Packet length configuration 0 (00): Fixed packet length mode. Length configured in `PKTLEN` register 1 (01): Variable packet length mode. Packet length configured by the first byte after sync word 2 (10): Infinite packet length mode 3 (11): Reserved

0x09: ADDR – Device Address

Bit	Field Name	Reset	R/W	Description
7:0	DEVICE_ADDR[7:0]	0 (0x00)	R/W	Address used for packet filtration. Optional broadcast addresses are 0 (0x00) and 255 (0xFF).

0x0A: CHANNR – Channel Number

Bit	Field Name	Reset	R/W	Description
7:0	CHAN[7:0]	0 (0x00)	R/W	The 8-bit unsigned channel number, which is multiplied by the channel spacing setting and added to the base frequency.

0x0B: FSCTRL1 – Frequency Synthesizer Control

Bit	Field Name	Reset	R/W	Description
7:6			R0	Not used
5		0	R/W	Reserved
4:0	FREQ_IF[4:0]	15 (0x0F)	R/W	The desired IF frequency to employ in RX. Subtracted from FS base frequency in RX and controls the digital complex mixer in the demodulator. $f_{IF} = \frac{f_{XOSC}}{2^{10}} \cdot FREQ_IF$ The default value gives an IF frequency of 381kHz, assuming a 26.0 MHz crystal.

0x0C: FSCTRL0 – Frequency Synthesizer Control

Bit	Field Name	Reset	R/W	Description
7:0	FREQOFF[7:0]	0 (0x00)	R/W	Frequency offset added to the base frequency before being used by the frequency synthesizer. (2s-complement). Resolution is $F_{XTAL}/2^{14}$ (1.59kHz-1.65kHz); range is ±202 kHz to ±210 kHz, dependent of XTAL frequency.

0x0D: FREQ2 – Frequency Control Word, High Byte

Bit	Field Name	Reset	R/W	Description
7:6	FREQ[23:22]	0 (00)	R	`FREQ[23:22]` is always 0 (the `FREQ2` register is less than 36 with 26-27 MHz crystal)
5:0	FREQ[21:16]	30 (0x1E)	R/W	`FREQ[23:0]` is the base frequency for the frequency synthesiser in increments of $f_{XOSC}/2^{16}$. $f_{carrier} = \frac{f_{XOSC}}{2^{16}} \cdot FREQ[23:0]$

0x0E: FREQ1 – Frequency Control Word, Middle Byte

Bit	Field Name	Reset	R/W	Description
7:0	FREQ[15:8]	196 (0xC4)	R/W	Ref. `FREQ2` register

0x0F: FREQ0 – Frequency Control Word, Low Byte

Bit	Field Name	Reset	R/W	Description
7:0	FREQ[7:0]	236 (0xEC)	R/W	Ref. `FREQ2` register

0x10: MDMCFG4 – Modem Configuration

Bit	Field Name	Reset	R/W	Description
7:6	CHANBW_E[1:0]	2 (0x02)	R/W	
5:4	CHANBW_M[1:0]	0 (0x00)	R/W	Sets the decimation ratio for the delta-sigma ADC input stream and thus the channel bandwidth. $BW_{channel} = \frac{f_{XOSC}}{8 \cdot (4 + CHANBW_M) \cdot 2^{CHANBW_E}}$ The default values give 203 kHz channel filter bandwidth, assuming a 26.0 MHz crystal.
3:0	DRATE_E[3:0]	12 (0x0C)	R/W	The exponent of the user specified symbol rate

0x11: MDMCFG3 – Modem Configuration

Bit	Field Name	Reset	R/W	Description
7:0	DRATE_M[7:0]	34 (0x22)	R/W	The mantissa of the user specified symbol rate. The symbol rate is configured using an unsigned, floating-point number with 9-bit mantissa and 4-bit exponent. The 9th bit is a hidden '1'. The resulting data rate is: $R_{DATA} = \frac{(256 + DRATE_M) \cdot 2^{DRATE_E}}{2^{28}} \cdot f_{XOSC}$ The default values give a data rate of 115.051 kBaud (closest setting to 115.2 kBaud), assuming a 26.0 MHz crystal.

0x12: MDMCFG2 – Modem Configuration

<table>
<tr><th>Bit</th><th>Field Name</th><th>Reset</th><th>R/W</th><th>Description</th></tr>
<tr><td>7</td><td>DEM_DCFILT_OFF</td><td>0</td><td>R/W</td><td>Disable digital DC blocking filter before demodulator.
0 = Enable (better sensitivity)
1 = Disable (current optimized). Only for data rates ≤ 250 kBaud
The recommended IF frequency changes when the DC blocking is disabled. Please use SmartRF Studio [5] to calculate correct register setting.</td></tr>
<tr><td>6:4</td><td>MOD_FORMAT[2:0]</td><td>0 (000)</td><td>R/W</td><td>The modulation format of the radio signal
<table>
<tr><th>Setting</th><th>Modulation format</th></tr>
<tr><td>0 (000)</td><td>2-FSK</td></tr>
<tr><td>1 (001)</td><td>GFSK</td></tr>
<tr><td>2 (010)</td><td>-</td></tr>
<tr><td>3 (011)</td><td>ASK/OOK</td></tr>
<tr><td>4 (100)</td><td>4-FSK</td></tr>
<tr><td>5 (101)</td><td>-</td></tr>
<tr><td>6 (110)</td><td>-</td></tr>
<tr><td>7 (111)</td><td>MSK</td></tr>
</table>
MSK is only supported for data rates above 26 kBaud</td></tr>
<tr><td>3</td><td>MANCHESTER_EN</td><td>0</td><td>R/W</td><td>Enables Manchester encoding/decoding.
0 = Disable
1 = Enable</td></tr>
<tr><td>2:0</td><td>SYNC_MODE[2:0]</td><td>2 (010)</td><td>R/W</td><td>Combined sync-word qualifier mode.
The values 0 (000) and 4 (100) disables preamble and sync word transmission in TX and preamble and sync word detection in RX.
The values 1 (001), 2 (010), 5 (101) and 6 (110) enables 16-bit sync word transmission in TX and 16-bits sync word detection in RX. Only 15 of 16 bits need to match in RX when using setting 1 (001) or 5 (101). The values 3 (011) and 7 (111) enables repeated sync word transmission in TX and 32-bits sync word detection in RX (only 30 of 32 bits need to match).
<table>
<tr><th>Setting</th><th>Sync-word qualifier mode</th></tr>
<tr><td>0 (000)</td><td>No preamble/sync</td></tr>
<tr><td>1 (001)</td><td>15/16 sync word bits detected</td></tr>
<tr><td>2 (010)</td><td>16/16 sync word bits detected</td></tr>
<tr><td>3 (011)</td><td>30/32 sync word bits detected</td></tr>
<tr><td>4 (100)</td><td>No preamble/sync, carrier-sense above threshold</td></tr>
<tr><td>5 (101)</td><td>15/16 + carrier-sense above threshold</td></tr>
<tr><td>6 (110)</td><td>16/16 + carrier-sense above threshold</td></tr>
<tr><td>7 (111)</td><td>30/32 + carrier-sense above threshold</td></tr>
</table></td></tr>
</table>

0x13: MDMCFG1– Modem Configuration

Bit	Field Name	Reset	R/W	Description
7	FEC_EN	0	R/W	Enable Forward Error Correction (FEC) with interleaving for packet payload 0 = Disable 1 = Enable (Only supported for fixed packet length mode, i.e. `PKTCTRL0.LENGTH_CONFIG=0`)
6:4	NUM_PREAMBLE[2:0]	2 (010)	R/W	Sets the minimum number of preamble bytes to be transmitted Setting / Number of preamble bytes 0 (000) / 2 1 (001) / 3 2 (010) / 4 3 (011) / 6 4 (100) / 8 5 (101) / 12 6 (110) / 16 7 (111) / 24
3:2			R0	Not used
1:0	CHANSPC_E[1:0]	2 (10)	R/W	2 bit exponent of channel spacing

0x14: MDMCFG0– Modem Configuration

Bit	Field Name	Reset	R/W	Description
7:0	CHANSPC_M[7:0]	248 (0xF8)	R/W	8-bit mantissa of channel spacing. The channel spacing is multiplied by the channel number `CHAN` and added to the base frequency. It is unsigned and has the format: $\Delta f_{CHANNEL} = \frac{f_{XOSC}}{2^{18}} \cdot (256 + CHANSPC_M) \cdot 2^{CHANSPC_E}$ The default values give 199.951 kHz channel spacing (the closest setting to 200 kHz), assuming 26.0 MHz crystal frequency.

0x15: DEVIATN – Modem Deviation Setting

Bit	Field Name	Reset	R/W	Description	
7			R0	Not used.	
6:4	DEVIATION_E[2:0]	4 (100)	R/W	Deviation exponent.	
3			R0	Not used.	
2:0	DEVIATION_M[2:0]	7 (111)	R/W	TX	
				2-FSK/ GFSK/ 4-FSK	Specifies the nominal frequency deviation from the carrier for a ‘0’ (-DEVIATN) and ‘1’ (+DEVIATN) in a mantissa-exponent format, interpreted as a 4-bit value with MSB implicit 1. The resulting frequency deviation is given by: $f_{dev} = \frac{f_{xosc}}{2^{17}} \cdot (8 + DEVIATION_M) \cdot 2^{DEVIATION_E}$ The default values give ±47.607 kHz deviation assuming 26.0 MHz crystal frequency.
				MSK	Specifies the fraction of symbol period (1/8-8/8) during which a phase change occurs (‘0’: +90deg, ‘1’:-90deg). Refer to the SmartRF Studio software [5] for correct DEVIATN setting when using MSK.
				ASK/OOK	This setting has no effect.
				RX	
				2-FSK/ GFSK/ 4-FSK	Specifies the expected frequency deviation of incoming signal, must be approximately right for demodulation to be performed reliably and robustly.
				MSK/ ASK/OOK	This setting has no effect.

0x16: MCSM2 – Main Radio Control State Machine Configuration

Bit	Field Name	Reset	R/W	Description
7:5			R0	Not used
4	RX_TIME_RSSI	0	R/W	Direct RX termination based on RSSI measurement (carrier sense). For ASK/OOK modulation, RX times out if there is no carrier sense in the first 8 symbol periods.
3	RX_TIME_QUAL	0	R/W	When the `RX_TIME` timer expires, the chip checks if sync word is found when `RX_TIME_QUAL=0`, or either sync word is found or PQI is set when `RX_TIME_QUAL=1`.
2:0	RX_TIME[2:0]	7 (111)	R/W	Timeout for sync word search in RX for both WOR mode and normal RX operation. The timeout is relative to the programmed `EVENT0` timeout.

The RX timeout in µs is given by `EVENT0`·C(`RX_TIME`, `WOR_RES`) ·26/X, where C is given by the table below and X is the crystal oscillator frequency in MHz:

Setting	WOR_RES = 0	WOR_RES = 1	WOR_RES = 2	WOR_RES = 3
0 (000)	3.6058	18.0288	32.4519	46.8750
1 (001)	1.8029	9.0144	16.2260	23.4375
2 (010)	0.9014	4.5072	8.1130	11.7188
3 (011)	0.4507	2.2536	4.0565	5.8594
4 (100)	0.2254	1.1268	2.0282	2.9297
5 (101)	0.1127	0.5634	1.0141	1.4648
6 (110)	0.0563	0.2817	0.5071	0.7324
7 (111)	Until end of packet			

As an example, `EVENT0=34666`, `WOR_RES=0` and `RX_TIME=6` corresponds to 1.96 ms RX timeout, 1 s polling interval and 0.195% duty cycle. Note that `WOR_RES` should be 0 or 1 when using WOR because using `WOR_RES` > 1 will give a very low duty cycle. In applications where WOR is not used all settings of `WOR_RES` can be used.

The duty cycle using WOR is approximated by:

Setting	`WOR_RES=0`	`WOR_RES=1`
0 (000)	12.50%	1.95%
1 (001)	6.250%	9765ppm
2 (010)	3.125%	4883ppm
3 (011)	1.563%	2441ppm
4 (100)	0.781%	NA
5 (101)	0.391%	NA
6 (110)	0.195%	NA
7 (111)	NA	

Note that the RC oscillator must be enabled in order to use setting 0-6, because the timeout counts RC oscillator periods. WOR mode does not need to be enabled.
The timeout counter resolution is limited: With `RX_TIME=0`, the timeout count is given by the 13 MSBs of `EVENT0`, decreasing to the 7MSBs of `EVENT0` with `RX_TIME=6`.

0x17: MCSM1– Main Radio Control State Machine Configuration

Bit	Field Name	Reset	R/W	Description
7:6			R0	Not used
5:4	CCA_MODE[1:0]	3 (11)	R/W	Selects `CCA_MODE`; Reflected in CCA signal Setting: Clear channel indication 0 (00): Always 1 (01): If RSSI below threshold 2 (10): Unless currently receiving a packet 3 (11): If RSSI below threshold unless currently receiving a packet
3:2	RXOFF_MODE[1:0]	0 (00)	R/W	Select what should happen when a packet has been received Setting: Next state after finishing packet reception 0 (00): `IDLE` 1 (01): FSTXON 2 (10): TX 3 (11): Stay in RX It is not possible to set `RXOFF_MODE` to be TX or FSTXON and at the same time use CCA.
1:0	TXOFF_MODE[1:0]	0 (00)	R/W	Select what should happen when a packet has been sent (TX) Setting: Next state after finishing packet transmission 0 (00): IDLE 1 (01): FSTXON 2 (10): Stay in TX (start sending preamble) 3 (11): RX

0x18: MCSM0– Main Radio Control State Machine Configuration

<table>
<tr><th>Bit</th><th>Field Name</th><th>Reset</th><th>R/W</th><th>Description</th></tr>
<tr><td>7:6</td><td></td><td></td><td>R0</td><td>Not used</td></tr>
<tr><td>5:4</td><td>FS_AUTOCAL[1:0]</td><td>0 (00)</td><td>R/W</td><td>Automatically calibrate when going to RX or TX, or back to IDLE
<table>
<tr><th>Setting</th><th>When to perform automatic calibration</th></tr>
<tr><td>0 (00)</td><td>Never (manually calibrate using SCAL strobe)</td></tr>
<tr><td>1 (01)</td><td>When going from IDLE to RX or TX (or FSTXON)</td></tr>
<tr><td>2 (10)</td><td>When going from RX or TX back to IDLE automatically</td></tr>
<tr><td>3 (11)</td><td>Every 4th time when going from RX or TX to IDLE automatically</td></tr>
</table>
In some automatic wake-on-radio (WOR) applications, using setting 3 (11) can significantly reduce current consumption.</td></tr>
<tr><td>3:2</td><td>PO_TIMEOUT</td><td>1 (01)</td><td>R/W</td><td>Programs the number of times the six-bit ripple counter must expire after XOSC has stabilized before CHP_RDYn goes low [1].

If XOSC is on (stable) during power-down, PO_TIMEOUT should be set so that the regulated digital supply voltage has time to stabilize before CHP_RDYn goes low (PO_TIMEOUT=2 recommended). Typical start-up time for the voltage regulator is 50 µs.

For robust operation it is recommended to use PO_TIMEOUT = 2 or 3 when XOSC is off during power-down.

[1] Note that the XOSC_STABLE signal will be asserted at the same time as the CHP_RDYn signal; i.e. the PO_TIMEOUT delays both signals and does not insert a delay between the signals
<table>
<tr><th>Setting</th><th>Expire count</th><th>Timeout after XOSC start</th></tr>
<tr><td>0 (00)</td><td>1</td><td>Approx. 2.3 – 2.4 µs</td></tr>
<tr><td>1 (01)</td><td>16</td><td>Approx. 37 – 39 µs</td></tr>
<tr><td>2 (10)</td><td>64</td><td>Approx. 149 – 155 µs</td></tr>
<tr><td>3 (11)</td><td>256</td><td>Approx. 597 – 620 µs</td></tr>
</table>
Exact timeout depends on crystal frequency.</td></tr>
<tr><td>1</td><td>PIN_CTRL_EN</td><td>0</td><td>R/W</td><td>Enables the pin radio control option</td></tr>
<tr><td>0</td><td>XOSC_FORCE_ON</td><td>0</td><td>R/W</td><td>Force the XOSC to stay on in the SLEEP state.</td></tr>
</table>

0x19: FOCCFG – Frequency Offset Compensation Configuration

Bit	Field Name	Reset	R/W	Description
7:6			R0	Not used
5	FOC_BS_CS_GATE	1	R/W	If set, the demodulator freezes the frequency offset compensation and clock recovery feedback loops until the CS signal goes high.
4:3	FOC_PRE_K[1:0]	2 (10)	R/W	The frequency compensation loop gain to be used before a sync word is detected. Setting: Freq. compensation loop gain before sync word 0 (00): *K* 1 (01): 2*K* 2 (10): 3*K* 3 (11): 4*K*
2	FOC_POST_K	1	R/W	The frequency compensation loop gain to be used after a sync word is detected. Setting: Freq. compensation loop gain after sync word 0: Same as FOC_PRE_K 1: *K*/2
1:0	FOC_LIMIT[1:0]	2 (10)	R/W	The saturation point for the frequency offset compensation algorithm: Setting: Saturation point (max compensated offset) 0 (00): ±0 (no frequency offset compensation) 1 (01): $\pm BW_{CHAN}/8$ 2 (10): $\pm BW_{CHAN}/4$ 3 (11): $\pm BW_{CHAN}/2$ Frequency offset compensation is not supported for ASK/OOK. Always use FOC_LIMIT=0 with these modulation formats.

0x1A: BSCFG – Bit Synchronization Configuration

Bit	Field Name	Reset	R/W	Description
7:6	BS_PRE_KI[1:0]	1 (01)	R/W	The clock recovery feedback loop integral gain to be used before a sync word is detected (used to correct offsets in data rate): Setting: Clock recovery loop integral gain before sync word 0 (00): K_I 1 (01): $2K_I$ 2 (10): $3K_I$ 3 (11): $4K_I$
5:4	BS_PRE_KP[1:0]	2 (10)	R/W	The clock recovery feedback loop proportional gain to be used before a sync word is detected. Setting: Clock recovery loop proportional gain before sync word 0 (00): K_P 1 (01): $2K_P$ 2 (10): $3K_P$ 3 (11): $4K_P$
3	BS_POST_KI	1	R/W	The clock recovery feedback loop integral gain to be used after a sync word is detected. Setting: Clock recovery loop integral gain after sync word 0: Same as BS_PRE_KI 1: $K_I/2$
2	BS_POST_KP	1	R/W	The clock recovery feedback loop proportional gain to be used after a sync word is detected. Setting: Clock recovery loop proportional gain after sync word 0: Same as BS_PRE_KP 1: K_P
1:0	BS_LIMIT[1:0]	0 (00)	R/W	The saturation point for the data rate offset compensation algorithm: Setting: Data rate offset saturation (max data rate difference) 0 (00): ±0 (No data rate offset compensation performed) 1 (01): ±3.125 % data rate offset 2 (10): ±6.25 % data rate offset 3 (11): ±12.5 % data rate offset

0x1B: AGCCTRL2 – AGC Control

<table>
<tr><th>Bit</th><th>Field Name</th><th>Reset</th><th>R/W</th><th>Description</th></tr>
<tr><td>7:6</td><td>MAX_DVGA_GAIN[1:0]</td><td>0 (00)</td><td>R/W</td><td>Reduces the maximum allowable DVGA gain.
<table>
<tr><th>Setting</th><th>Allowable DVGA settings</th></tr>
<tr><td>0 (00)</td><td>All gain settings can be used</td></tr>
<tr><td>1 (01)</td><td>The highest gain setting can not be used</td></tr>
<tr><td>2 (10)</td><td>The 2 highest gain settings can not be used</td></tr>
<tr><td>3 (11)</td><td>The 3 highest gain settings can not be used</td></tr>
</table></td></tr>
<tr><td>5:3</td><td>MAX_LNA_GAIN[2:0]</td><td>0 (000)</td><td>R/W</td><td>Sets the maximum allowable LNA + LNA 2 gain relative to the maximum possible gain.
<table>
<tr><th>Setting</th><th>Maximum allowable LNA + LNA 2 gain</th></tr>
<tr><td>0 (000)</td><td>Maximum possible LNA + LNA 2 gain</td></tr>
<tr><td>1 (001)</td><td>Approx. 2.6 dB below maximum possible gain</td></tr>
<tr><td>2 (010)</td><td>Approx. 6.1 dB below maximum possible gain</td></tr>
<tr><td>3 (011)</td><td>Approx. 7.4 dB below maximum possible gain</td></tr>
<tr><td>4 (100)</td><td>Approx. 9.2 dB below maximum possible gain</td></tr>
<tr><td>5 (101)</td><td>Approx. 11.5 dB below maximum possible gain</td></tr>
<tr><td>6 (110)</td><td>Approx. 14.6 dB below maximum possible gain</td></tr>
<tr><td>7 (111)</td><td>Approx. 17.1 dB below maximum possible gain</td></tr>
</table></td></tr>
<tr><td>2:0</td><td>MAGN_TARGET[2:0]</td><td>3 (011)</td><td>R/W</td><td>These bits set the target value for the averaged amplitude from the digital channel filter (1 LSB = 0 dB).
<table>
<tr><th>Setting</th><th>Target amplitude from channel filter</th></tr>
<tr><td>0 (000)</td><td>24 dB</td></tr>
<tr><td>1 (001)</td><td>27 dB</td></tr>
<tr><td>2 (010)</td><td>30 dB</td></tr>
<tr><td>3 (011)</td><td>33 dB</td></tr>
<tr><td>4 (100)</td><td>36 dB</td></tr>
<tr><td>5 (101)</td><td>38 dB</td></tr>
<tr><td>6 (110)</td><td>40 dB</td></tr>
<tr><td>7 (111)</td><td>42 dB</td></tr>
</table></td></tr>
</table>

0x1C: AGCCTRL1 – AGC Control

Bit	Field Name	Reset	R/W	Description
7			R0	Not used
6	AGC_LNA_PRIORITY	1	R/W	Selects between two different strategies for LNA and LNA 2 gain adjustment. When 1, the LNA gain is decreased first. When 0, the LNA 2 gain is decreased to minimum before decreasing LNA gain.
5:4	CARRIER_SENSE_REL_THR[1:0]	0 (00)	R/W	Sets the relative change threshold for asserting carrier sense Setting: Carrier sense relative threshold 0 (00): Relative carrier sense threshold disabled 1 (01): 6 dB increase in RSSI value 2 (10): 10 dB increase in RSSI value 3 (11): 14 dB increase in RSSI value
3:0	CARRIER_SENSE_ABS_THR[3:0]	0 (0000)	R/W	Sets the absolute RSSI threshold for asserting carrier sense. The 2-complement signed threshold is programmed in steps of 1 dB and is relative to the MAGN_TARGET setting. Setting: Carrier sense absolute threshold (Equal to channel filter amplitude when AGC has not decreased gain) -8 (1000): Absolute carrier sense threshold disabled -7 (1001): 7 dB below `MAGN_TARGET` setting …: … -1 (1111): 1 dB below `MAGN_TARGET` setting 0 (0000): At `MAGN_TARGET` setting 1 (0001): 1 dB above `MAGN_TARGET` setting …: … 7 (0111): 7 dB above `MAGN_TARGET` setting

0x1D: AGCCTRL0 – AGC Control

Bit	Field Name	Reset	R/W	Description
7:6	HYST_LEVEL[1:0]	2 (10)	R/W	Sets the level of hysteresis on the magnitude deviation (internal AGC signal that determine gain changes). Setting: Description 0 (00): No hysteresis, small symmetric dead zone, high gain 1 (01): Low hysteresis, small asymmetric dead zone, medium gain 2 (10): Medium hysteresis, medium asymmetric dead zone, medium gain 3 (11): Large hysteresis, large asymmetric dead zone, low gain
5:4	WAIT_TIME[1:0]	1 (01)	R/W	Sets the number of channel filter samples from a gain adjustment has been made until the AGC algorithm starts accumulating new samples. Setting: Channel filter samples 0 (00): 8 1 (01): 16 2 (10): 24 3 (11): 32
3:2	AGC_FREEZE[1:0]	0 (00)	R/W	Control when the AGC gain should be frozen. Setting: Function 0 (00): Normal operation. Always adjust gain when required. 1 (01): The gain setting is frozen when a sync word has been found. 2 (10): Manually freeze the analogue gain setting and continue to adjust the digital gain. 3 (11): Manually freezes both the analogue and the digital gain setting. Used for manually overriding the gain.
1:0	FILTER_LENGTH[1:0]	1 (01)	R/W	2-FSK, 4-FSK, MSK: Sets the averaging length for the amplitude from the channel filter. ASK, OOK: Sets the OOK/ASK decision boundary for OOK/ASK reception. Setting: Channel filter samples: OOK/ASK decision boundary 0 (00): 8: 4 dB 1 (01): 16: 8 dB 2 (10): 32: 12 dB 3 (11): 64: 16 dB

0x1E: WOREVT1 – High Byte Event0 Timeout

Bit	Field Name	Reset	R/W	Description
7:0	EVENT0[15:8]	135 (0x87)	R/W	High byte of `EVENT0` timeout register $t_{Event0} = \frac{750}{f_{XOSC}} \cdot EVENT0 \cdot 2^{5 \cdot WOR_RES}$

0x1F: WOREVT0 –Low Byte Event0 Timeout

Bit	Field Name	Reset	R/W	Description
7:0	EVENT0[7:0]	107 (0x6B)	R/W	Low byte of `EVENT0` timeout register. The default `EVENT0` value gives 1.0s timeout, assuming a 26.0 MHz crystal.

0x20: WORCTRL – Wake On Radio Control

Bit	Field Name	Reset	R/W	Description
7	RC_PD	1	R/W	Power down signal to RC oscillator. When written to 0, automatic initial calibration will be performed
6:4	EVENT1[2:0]	7 (111)	R/W	Timeout setting from register block. Decoded to Event 1 timeout. RC oscillator clock frequency equals $F_{XOSC}/750$, which is 34.7 – 36 kHz, depending on crystal frequency. The table below lists the number of clock periods after Event 0 before Event 1 times out. Setting | t_{Event1} 0 (000) | 4 (0.111 – 0.115 ms) 1 (001) | 6 (0.167 – 0.173 ms) 2 (010) | 8 (0.222 – 0.230 ms) 3 (011) | 12 (0.333 – 0.346 ms) 4 (100) | 16 (0.444 – 0.462 ms) 5 (101) | 24 (0.667 – 0.692 ms) 6 (110) | 32 (0.889 – 0.923 ms) 7 (111) | 48 (1.333 – 1.385 ms)
3	RC_CAL	1	R/W	Enables (1) or disables (0) the RC oscillator calibration.
2			R0	Not used
1:0	WOR_RES	0 (00)	R/W	Controls the Event 0 resolution as well as maximum timeout of the WOR module and maximum timeout under normal RX operation: Setting | Resolution (1 LSB) | Max timeout 0 (00) | 1 period (28 – 29 µs) | 1.8 – 1.9 seconds 1 (01) | 2^5 periods (0.89 – 0.92 ms) | 58 – 61 seconds 2 (10) | 2^{10} periods (28 – 30 ms) | 31 – 32 minutes 3 (11) | 2^{15} periods (0.91 – 0.94 s) | 16.5 – 17.2 hours Note that `WOR_RES` should be 0 or 1 when using WOR because `WOR_RES` > 1 will give a very low duty cycle. In normal RX operation all settings of `WOR_RES` can be used.

0x21: FREND1 – Front End RX Configuration

Bit	Field Name	Reset	R/W	Description
7:6	LNA_CURRENT[1:0]	1 (01)	R/W	Adjusts front-end LNA PTAT current output
5:4	LNA2MIX_CURRENT[1:0]	1 (01)	R/W	Adjusts front-end PTAT outputs
3:2	LODIV_BUF_CURRENT_RX[1:0]	1 (01)	R/W	Adjusts current in RX LO buffer (LO input to mixer)
1:0	MIX_CURRENT[1:0]	2 (10)	R/W	Adjusts current in mixer

0x22: FREND0 – Front End TX Configuration

Bit	Field Name	Reset	R/W	Description
7:6			R0	Not used
5:4	LODIV_BUF_CURRENT_TX[1:0]	1 (0x01)	R/W	Adjusts current TX LO buffer (input to PA). The value to use in this field is given by the SmartRF Studio software [5].
3			R0	Not used
2:0	PA_POWER[2:0]	0 (0x00)	R/W	Selects PA power setting. This value is an index to the `PATABLE`, which can be programmed with up to 8 different PA settings. In OOK/ASK mode, this selects the `PATABLE` index to use when transmitting a '1'. `PATABLE` index zero is used in OOK/ASK when transmitting a '0'. The `PATABLE` settings from index '0' to the `PA_POWER` value are used for ASK TX shaping, and for power ramp-up/ramp-down at the start/end of transmission in all TX modulation formats.

0x23: FSCAL3 – Frequency Synthesizer Calibration

Bit	Field Name	Reset	R/W	Description
7:6	FSCAL3[7:6]	2 (0x02)	R/W	Frequency synthesizer calibration configuration. The value to write in this field before calibration is given by the SmartRF Studio software.
5:4	CHP_CURR_CAL_EN[1:0]	2 (0x02)	R/W	Disable charge pump calibration stage when 0.
3:0	FSCAL3[3:0]	9 (1001)	R/W	Frequency synthesizer calibration result register. Digital bit vector defining the charge pump output current, on an exponential scale: $I_OUT = I_0 \cdot 2^{FSCAL3[3:0]/4}$ Fast frequency hopping without calibration for each hop can be done by calibrating upfront for each frequency and saving the resulting `FSCAL3`, `FSCAL2` and `FSCAL1` register values. Between each frequency hop, calibration can be replaced by writing the `FSCAL3`, `FSCAL2` and `FSCAL1` register values corresponding to the next RF frequency.

0x24: FSCAL2 – Frequency Synthesizer Calibration

Bit	Field Name	Reset	R/W	Description
7:6			R0	Not used
5	VCO_CORE_H_EN	0	R/W	Choose high (1) / low (0) VCO
4:0	FSCAL2[4:0]	10 (0x0A)	R/W	Frequency synthesizer calibration result register. VCO current calibration result and override value. Fast frequency hopping without calibration for each hop can be done by calibrating upfront for each frequency and saving the resulting `FSCAL3`, `FSCAL2` and `FSCAL1` register values. Between each frequency hop, calibration can be replaced by writing the `FSCAL3`, `FSCAL2` and `FSCAL1` register values corresponding to the next RF frequency.

0x25: FSCAL1 – Frequency Synthesizer Calibration

Bit	Field Name	Reset	R/W	Description
7:6			R0	Not used
5:0	FSCAL1[5:0]	32 (0x20)	R/W	Frequency synthesizer calibration result register. Capacitor array setting for VCO coarse tuning. Fast frequency hopping without calibration for each hop can be done by calibrating upfront for each frequency and saving the resulting `FSCAL3`, `FSCAL2` and `FSCAL1` register values. Between each frequency hop, calibration can be replaced by writing the `FSCAL3`, `FSCAL2` and `FSCAL1` register values corresponding to the next RF frequency.

0x26: FSCAL0 – Frequency Synthesizer Calibration

Bit	Field Name	Reset	R/W	Description
7			R0	Not used
6:0	FSCAL0[6:0]	13 (0x0D)	R/W	Frequency synthesizer calibration control. The value to use in this register is given by the SmartRF Studio software [5].

0x27: RCCTRL1 – RC Oscillator Configuration

Bit	Field Name	Reset	R/W	Description
7		0	R0	Not used
6:0	RCCTRL1[6:0]	65 (0x41)	R/W	RC oscillator configuration.

0x28: RCCTRL0 – RC Oscillator Configuration

Bit	Field Name	Reset	R/W	Description
7		0	R0	Not used
6:0	RCCTRL0[6:0]	0 (0x00)	R/W	RC oscillator configuration.

29.2 Configuration Register Details – Registers that Loose Programming in SLEEP State

0x29: FSTEST – Frequency Synthesizer Calibration Control

Bit	Field Name	Reset	R/W	Description
7:0	FSTEST[7:0]	89 (0x59)	R/W	For test only. Do not write to this register.

0x2A: PTEST – Production Test

Bit	Field Name	Reset	R/W	Description
7:0	PTEST[7:0]	127 (0x7F)	R/W	Writing 0xBF to this register makes the on-chip temperature sensor available in the IDLE state. The default 0x7F value should then be written back before leaving the IDLE state. Other use of this register is for test only.

0x2B: AGCTEST – AGC Test

Bit	Field Name	Reset	R/W	Description
7:0	AGCTEST[7:0]	63 (0x3F)	R/W	For test only. Do not write to this register.

0x2C: TEST2 – Various Test Settings

Bit	Field Name	Reset	R/W	Description
7:0	TEST2[7:0]	136 (0x88)	R/W	The value to use in this register is given by the SmartRF Studio software [5]. This register will be forced to 0x88 or 0x81 when it wakes up from SLEEP mode, depending on the configuration of FIFOTHR. ADC_RETENTION. Note that the value read from this register when waking up from SLEEP always is the reset value (0x88) regardless of the ADC_RETENTION setting. The inverting of some of the bits due to the ADC_RETENTION setting is only seen INTERNALLY in the analog part.

0x2D: TEST1 – Various Test Settings

Bit	Field Name	Reset	R/W	Description
7:0	TEST1[7:0]	49 (0x31)	R/W	The value to use in this register is given by the SmartRF Studio software [5]. This register will be forced to 0x31 or 0x35 when it wakes up from SLEEP mode, depending on the configuration of FIFOTHR. ADC_RETENTION. Note that the value read from this register when waking up from SLEEP always is the reset value (0x31) regardless of the ADC_RETENTION setting. The inverting of some of the bits due to the ADC_RETENTION setting is only seen INTERNALLY in the analog part.

0x2E: TEST0 – Various Test Settings

Bit	Field Name	Reset	R/W	Description
7:2	TEST0[7:2]	2 (0x02)	R/W	The value to use in this register is given by the SmartRF Studio software [5].
1	VCO_SEL_CAL_EN	1	R/W	Enable VCO selection calibration stage when 1
0	TEST0[0]	1	R/W	The value to use in this register is given by the SmartRF Studio software [5].

29.3 Status Register Details

0x30 (0xF0): PARTNUM – Chip ID

Bit	Field Name	Reset	R/W	Description
7:0	PARTNUM[7:0]	0 (0x00)	R	Chip part number

0x31 (0xF1): VERSION – Chip ID

Bit	Field Name	Reset	R/W	Description
7:0	VERSION[7:0]	4 (0x04)	R	Chip version number.

0x32 (0xF2): FREQEST – Frequency Offset Estimate from Demodulator

Bit	Field Name	Reset	R/W	Description
7:0	FREQOFF_EST		R	The estimated frequency offset (2's complement) of the carrier. Resolution is $F_{XTAL}/2^{14}$ (1.59 - 1.65 kHz); range is ±202 kHz to ±210 kHz, depending on XTAL frequency. Frequency offset compensation is only supported for 2-FSK, GFSK, 4-FSK, and MSK modulation. This register will read 0 when using ASK or OOK modulation.

0x33 (0xF3): LQI – Demodulator Estimate for Link Quality

Bit	Field Name	Reset	R/W	Description
7	CRC OK		R	The last CRC comparison matched. Cleared when entering/restarting RX mode.
6:0	LQI_EST[6:0]		R	The Link Quality Indicator estimates how easily a received signal can be demodulated. Calculated over the 64 symbols following the sync word

0x34 (0xF4): RSSI – Received Signal Strength Indication

Bit	Field Name	Reset	R/W	Description
7:0	RSSI		R	Received signal strength indicator

0x35 (0xF5): MARCSTATE – Main Radio Control State Machine State

Bit	Field Name	Reset	R/W	Description
7:5			R0	Not used
4:0	MARC_STATE[4:0]		R	Main Radio Control FSM State

Value	State name	State (Figure 25, page 50)
0 (0x00)	SLEEP	SLEEP
1 (0x01)	IDLE	IDLE
2 (0x02)	XOFF	XOFF
3 (0x03)	VCOON_MC	MANCAL
4 (0x04)	REGON_MC	MANCAL
5 (0x05)	MANCAL	MANCAL
6 (0x06)	VCOON	FS_WAKEUP
7 (0x07)	REGON	FS_WAKEUP
8 (0x08)	STARTCAL	CALIBRATE
9 (0x09)	BWBOOST	SETTLING
10 (0x0A)	FS_LOCK	SETTLING
11 (0x0B)	IFADCON	SETTLING
12 (0x0C)	ENDCAL	CALIBRATE
13 (0x0D)	RX	RX
14 (0x0E)	RX_END	RX
15 (0x0F)	RX_RST	RX
16 (0x10)	TXRX_SWITCH	TXRX_SETTLING
17 (0x11)	RXFIFO_OVERFLOW	RXFIFO_OVERFLOW
18 (0x12)	FSTXON	FSTXON
19 (0x13)	TX	TX
20 (0x14)	TX_END	TX
21 (0x15)	RXTX_SWITCH	RXTX_SETTLING
22 (0x16)	TXFIFO_UNDERFLOW	TXFIFO_UNDERFLOW

Note: it is not possible to read back the SLEEP or XOFF state numbers because setting CSn low will make the chip enter the IDLE mode from the SLEEP or XOFF states.

0x36 (0xF6): WORTIME1 – High Byte of WOR Time

Bit	Field Name	Reset	R/W	Description
7:0	TIME[15:8]		R	High byte of timer value in WOR module

0x37 (0xF7): WORTIME0 – Low Byte of WOR Time

Bit	Field Name	Reset	R/W	Description
7:0	TIME[7:0]		R	Low byte of timer value in WOR module

0x38 (0xF8): PKTSTATUS – Current GDOx Status and Packet Status

Bit	Field Name	Reset	R/W	Description
7	CRC_OK		R	The last CRC comparison matched. Cleared when entering/restarting RX mode.
6	CS		R	Carrier sense. Cleared when entering IDLE mode.
5	PQT_REACHED		R	Preamble Quality reached. If leaving RX state when this bit is set it will remain asserted until the chip re-enters RX state (`MARCSTATE=0x0D`). The bit will also be cleared if PQI goes below the programmed PQT value.
4	CCA		R	Channel is clear
3	SFD		R	Start of Frame Delimiter. In RX, this bit is asserted when sync word has been received and de-asserted at the end of the packet. It will also de-assert when a packet is discarded due to address or maximum length filtering or the radio enters RXFIFO_OVERFLOW state. In TX this bit will always read as 0.
2	`GDO2`		R	Current GDO2 value. Note: the reading gives the non-inverted value irrespective of what `IOCFG2.GDO2_INV` is programmed to. It is not recommended to check for PLL lock by reading `PKTSTATUS[2]` with `GDO2_CFG=0x0A`.
1			R0	Not used
0	`GDO0`		R	Current GDO0 value. Note: the reading gives the non-inverted value irrespective of what `IOCFG0.GDO0_INV` is programmed to. It is not recommended to check for PLL lock by reading `PKTSTATUS[0]` with `GDO0_CFG=0x0A`.

0x39 (0xF9): VCO_VC_DAC – Current Setting from PLL Calibration Module

Bit	Field Name	Reset	R/W	Description
7:0	VCO_VC_DAC[7:0]		R	Status register for test only.

0x3A (0xFA): TXBYTES – Underflow and Number of Bytes

Bit	Field Name	Reset	R/W	Description
7	TXFIFO_UNDERFLOW		R	
6:0	NUM_TXBYTES		R	Number of bytes in TX FIFO

0x3B (0xFB): RXBYTES – Overflow and Number of Bytes

Bit	Field Name	Reset	R/W	Description
7	RXFIFO_OVERFLOW		R	
6:0	NUM_RXBYTES		R	Number of bytes in RX FIFO

0x3C (0xFC): RCCTRL1_STATUS – Last RC Oscillator Calibration Result

Bit	Field Name	Reset	R/W	Description
7			R0	Not used
6:0	RCCTRL1_STATUS[6:0]		R	Contains the value from the last run of the RC oscillator calibration routine. For usage description refer to Application Note AN047 [4]

0x3D (0xFD): RCCTRL0_STATUS – Last RC Oscillator Calibration Result

Bit	Field Name	Reset	R/W	Description
7			R0	Not used
6:0	RCCTRL0_STATUS[6:0]		R	Contains the value from the last run of the RC oscillator calibration routine. For usage description refer to Application Note AN047 [4].

30 Soldering Information

The recommendations for lead-free reflow in IPC/JEDEC J-STD-020 should be followed.

31 Development Kit Ordering Information

Orderable Evaluation Module	Description	Minimum Order Quantity
CC1101DK433	CC1101 Development Kit, 433 MHz	1
CC1101DK868-915	CC1101 Development Kit, 868/915 MHz	1
CC1101EMK433	CC1101 Evaluation Module Kit, 433 MHz	1
CC1101EMK868-915	CC1101 Evaluation Module Kit, 868/915 MHz	1

Figure 34: Development Kit Ordering Information

32 References

[1] CC1101EM 315 - 433 MHz Reference Design (swrr046.zip)

[2] CC1101EM 868 – 915 MHz Reference Design (swrr045.zip)

[3] CC1101 Errata Notes (swrz020.pdf)

[4] AN047 CC1100/CC2500 – Wake-On-Radio (swra126.pdf)

[5] SmartRF™ Studio (swrc046.zip)

[6] CC1100 CC2500 Examples Libraries (swrc021.zip)

[7] CC1100/CC1150DK, CC1101DK, and CC2500/CC2550DK Examples and Libraries User Manual (swru109.pdf)

[8] DN010 Close-in Reception with CC1101 (swra147.pdf)

[9] DN017 CC11xx 868/915 MHz RF Matching (swra168.pdf)

[10] DN015 Permanent Frequency Offset Compensation (swra159.pdf)

[11] DN006 CC11xx Settings for FCC 15.247 Solutions (swra123.pdf)

[12] DN505 RSSI Interpretation and Timing (swra114.pdf)

[13] AN058 Antenna Selection Guide (swra161.pdf)

[14] AN067 Wireless MBUS Implementation with CC1101 and MSP430 (swra234.pdf)

[15] DN013 Programming Output Power on CC1101 (swra168.pdf)

[16] DN022 CC11xx OOK/ASK register settings (swra215.pdf)

[17] DN005 CC11xx Sensitivity versus Frequency Offset and Crystal Accuracy (swra122.pdf)

[18] DN501 PATABLE Access (swra110.pdf)

[19] DN504 FEC Implementation (swra113.pdf)

[20] DN507 FEC Decoding (swra313.pdf)

[21] CC1190 Data Sheet (swrs089.pdf)

[22] AN094 Using the CC1190 Front End with CC1101 under EN 300 220 (swra356.pdf)

[23] AN096 Using the CC1190 Front End with CC1101 under FCC 15.247 (swra361.pdf)

[24] DN032 Options for Cost Optimized CC11xx Matching (swra346.pdf)

[25] DN036 CC1101+CC1190 600 kbps Data Rate, +19 dBm transmit power without FHSS in 902-928 MHz frequency Band (swrr078.pdf

[26] TPS62730 Data Sheet (slvsac3.pdf)

33 General Information

33.1 Document History

Revision	Date	Description/Changes
SWRS061H	2012.10.09	Added 256 Hz clock to Table 41: GDOx Signal Selection
SWRS061G	2011.07.26	Crystal NX3225GA added to application circuit BOM Added reference to CC1190 range extender Added reference to AN094 and AN096 Corrected settling times and PLL turn-on/hop time in Table 15 Added reference to design notes DN032 and DN036 Removed references to AN001 and AN050 Changed description of MCSM0.PO_TIMEOUT Removed link to DN009 Added more detailed information about how to check for PLL lock in Section 22.1
SWRS061F	2010.01.10	Changed from multi-layer to wire-wound inductors in Table 38. Included PA_PD and LNA_PD GDO signals Table 41 as they were erroneously removed in SWRS061E. Updated WOR current consumption figures in Table 4. The Gaussian filter BT is changed from 1.0 to 0.5. Changed minimum data rate to 0.6 kBaud. Updated Table 25 with 0.6 kBaud data rate. Added information that digital signals with sharp edges should not be routed close to XOSC_Q1 PCB track. Added information about 1/XOSC glitch in received data output when using asynchronous serial mode Added information that a 27 MHz crystal is recommended for systems targeting compliance with modulation bandwidth requirements in the 869 to 870 MHz frequency range under EN 300 220. Updated overall state transition times in Table 34 and added table with frequency synthesizer calibration times (Table 35). Added -116 dBm 1% PER at 0.6 kBaud, 434 MHz Included information about 4-FSK modulation Added sensitivity figures for 4-FSK Added link to DN507 Updated PKTSTATUS.SFD. In TX this bit reads as 0. Updated PKTSTATUS.PQT_REACHED. Removed chapter on Packet Description Changed chapter on Ordering Information since this was duplicate information.
SWRS061E	2009.04.21	Maximum output power increased to +12/+11 dBm at 868/915MHz with the use of wire-wound inductors (Murata LQW15xx series). Changes to optimum PATABLE settings. Added typical output power over temperature and supply voltage. Changes to current consumption in TX mode. Added typical TX current consumption over temperature and supply voltage. Improved sensitivity figures at 868/915 MHz. Added typical sensitivity figures over temperature and supply voltage. Added typical RX current consumption over temperature and input power level. Changes to adjacent channel rejection at 38.4 kBaud. Changes to image rejection at 250 kBaud. Updates to selectivity/blocking plots. Changed bill of materials for 868/915 MHz application circuits to Murata LQW15xx series inductors. Changed analog temperature sensor temperature coefficient. Added links to DN501 and DN504 Changes to section 17.6. A low LQI value indicates a good link Changes to Package Description section Changes to Ordering Information section

Revision	Date	Description/Changes
SWRS061D	2008.05.22	Edited title and removed CC logo. Formatted and edited text. Put important notes in boxes. Corrected the 250 kBaud settings information from MSK to GFSK. Added plot over RX current variation versus input power level and temperature. Added tables for sensitivity, output power and TX current consumption variation versus temperature and supply voltage. Moved the selectivity plots to the electrical specification section and updated the 1.2 kBaud setting plot. Added load capacitance spec for the crystal oscillator. Updated links from AN039 to AN050. Updated information regarding optional filtering of 699 MHz emission, updated the 868/915 MHz application figure and bills of material, and added link to DN017. Updated and moved information regarding the crystal, a reference signal, the balun, and PCB layout recommendations to the section regarding the application circuit. Added information regarding antennas and link to the antenna selection guide AN058. Added link to DN005. Restructured Section 14.1 and added link to DN015. Moved improved spectrum information (GFSK info) to Section 16.1. Added information regarding the DEVIATN register in Chapter 16 and in the register description. Added information on ASK/OOK settings and added a link to DN022. Updated RSSI information and added link to DN505. Updated Section 18.2 information. Clarified the text describing Figure 27. Added link to DN013. Updated Figure 33. Updated Section 28.2. Updated information regarding serial synchronous mode. Added information regarding Wireless MBUS and added link to AN067. Updated info regarding the FIFOTHR register and TEST1 and TEST2. Updated info regarding the PKTSTAUS.SFD bit. Updated address for reading content from 0x3D. Updated registers information on bits that are not used. Updated Command Strobes section. Added link to DN009. Updated links in the reference chapter. Added link to the Community.
SWRS061C	2008.05.22	Added product information on the front page
SWRS061B	2007.06.05	Changed name on DN009 Close-in Reception with CC1101 to DN010 Close-in Reception with CC1101. Added info regarding how to reduce spurious emission at 699 MHz. Changes regarding this was done the following places: Table: RF Transmit Section, Figure 11: Typical Application and Evaluation Circuit 868/915 MHz, Table 20: Overview of External Components, and Table 21: Bill Of Materials for the Application Circuit. Changes made to Figure 27: Power-On Reset with SRES
SWRS061A	2007.06.30	Initial release.
SWRS061	2007.04.16	First preliminary data sheet release

Table 46: Document History

PACKAGING INFORMATION

Orderable Device	Status (1)	Package Type	Package Drawing	Pins	Package Qty	Eco Plan (2)	Lead/Ball Finish	MSL Peak Temp (3)	Op Temp (°C)	Top-Side Markings (4)	Samples
CC1101RTK	ACTIVE	VQFN	RTK	20	92	Green (RoHS & no Sb/Br)	CU NIPDAU	Level-3-260C-168 HR	-40 to 85	CC1101	Samples
CC1101RTKG3	ACTIVE	VQFN	RTK	20	92	Green (RoHS & no Sb/Br)	CU NIPDAU	Level-3-260C-168 HR	-40 to 85	CC1101	Samples
CC1101RTKR	ACTIVE	VQFN	RTK	20	3000	Green (RoHS & no Sb/Br)	CU NIPDAU	Level-3-260C-168 HR	-40 to 85	CC1101	Samples
CC1101RTKRG3	ACTIVE	VQFN	RTK	20	3000	Green (RoHS & no Sb/Br)	CU NIPDAU	Level-3-260C-168 HR	-40 to 85	CC1101	Samples

(1) The marketing status values are defined as follows:
ACTIVE: Product device recommended for new designs.
LIFEBUY: TI has announced that the device will be discontinued, and a lifetime-buy period is in effect.
NRND: Not recommended for new designs. Device is in production to support existing customers, but TI does not recommend using this part in a new design.
PREVIEW: Device has been announced but is not in production. Samples may or may not be available.
OBSOLETE: TI has discontinued the production of the device.

(2) Eco Plan - The planned eco-friendly classification: Pb-Free (RoHS), Pb-Free (RoHS Exempt), or Green (RoHS & no Sb/Br) - please check http://www.ti.com/productcontent for the latest availability information and additional product content details.
TBD: The Pb-Free/Green conversion plan has not been defined.
Pb-Free (RoHS): TI's terms "Lead-Free" or "Pb-Free" mean semiconductor products that are compatible with the current RoHS requirements for all 6 substances, including the requirement that lead not exceed 0.1% by weight in homogeneous materials. Where designed to be soldered at high temperatures, TI Pb-Free products are suitable for use in specified lead-free processes.
Pb-Free (RoHS Exempt): This component has a RoHS exemption for either 1) lead-based flip-chip solder bumps used between the die and package, or 2) lead-based die adhesive used between the die and leadframe. The component is otherwise considered Pb-Free (RoHS compatible) as defined above.
Green (RoHS & no Sb/Br): TI defines "Green" to mean Pb-Free (RoHS compatible), and free of Bromine (Br) and Antimony (Sb) based flame retardants (Br or Sb do not exceed 0.1% by weight in homogeneous material)

(3) MSL, Peak Temp. -- The Moisture Sensitivity Level rating according to the JEDEC industry standard classifications, and peak solder temperature.

(4) Only one of markings shown within the brackets will appear on the physical device.

Important Information and Disclaimer: The information provided on this page represents TI's knowledge and belief as of the date that it is provided. TI bases its knowledge and belief on information provided by third parties, and makes no representation or warranty as to the accuracy of such information. Efforts are underway to better integrate information from third parties. TI has taken and continues to take reasonable steps to provide representative and accurate information but may not have conducted destructive testing or chemical analysis on incoming materials and chemicals. TI and TI suppliers consider certain information to be proprietary, and thus CAS numbers and other limited information may not be available for release.

In no event shall TI's liability arising out of such information exceed the total purchase price of the TI part(s) at issue in this document sold by TI to Customer on an annual basis.

OTHER QUALIFIED VERSIONS OF CC1101 :

- Automotive: CC1101-Q1

NOTE: Qualified Version Definitions:

- Automotive - Q100 devices qualified for high-reliability automotive applications targeting zero defects

TAPE AND REEL INFORMATION

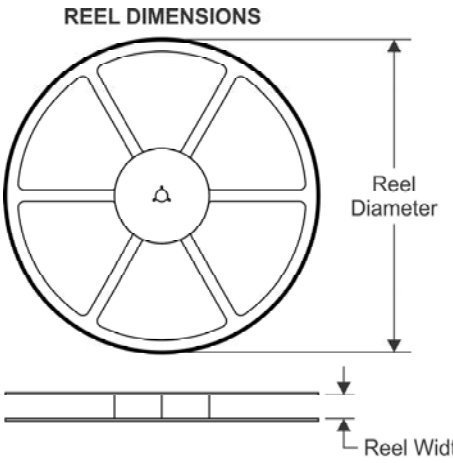

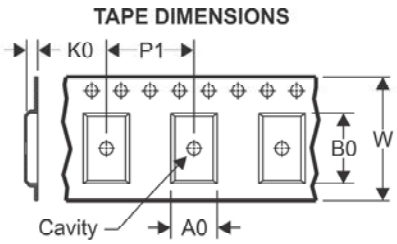

A0	Dimension designed to accommodate the component width
B0	Dimension designed to accommodate the component length
K0	Dimension designed to accommodate the component thickness
W	Overall width of the carrier tape
P1	Pitch between successive cavity centers

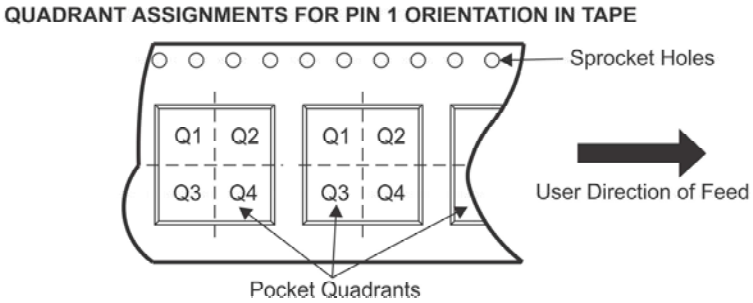

*All dimensions are nominal

Device	Package Type	Package Drawing	Pins	SPQ	Reel Diameter (mm)	Reel Width W1 (mm)	A0 (mm)	B0 (mm)	K0 (mm)	P1 (mm)	W (mm)	Pin1 Quadrant
CC1101RTKR	VQFN	RTK	20	3000	330.0	12.4	4.3	4.3	1.5	8.0	12.0	Q2

TAPE AND REEL BOX DIMENSIONS

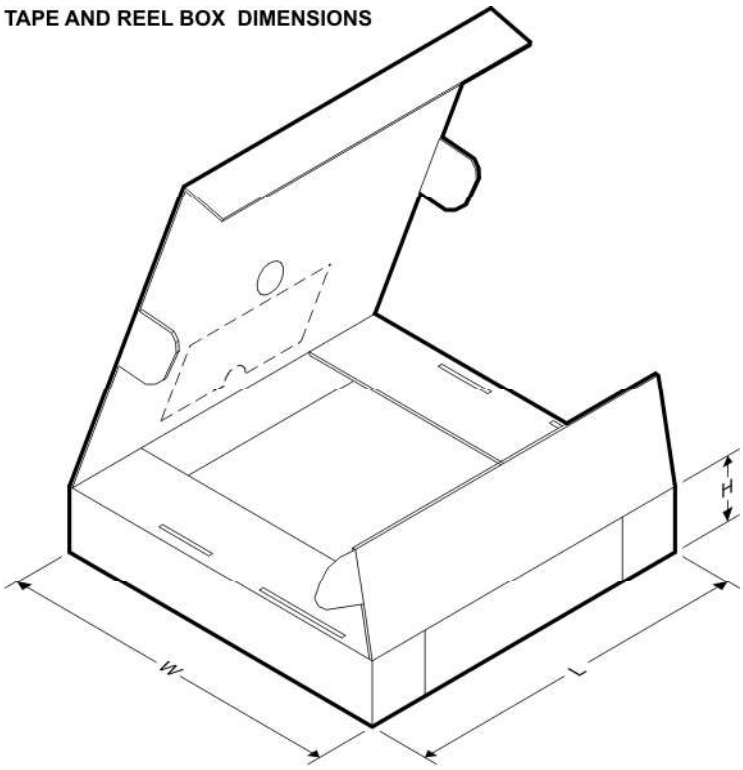

*All dimensions are nominal

Device	Package Type	Package Drawing	Pins	SPQ	Length (mm)	Width (mm)	Height (mm)
CC1101RTKR	VQFN	RTK	20	3000	338.1	338.1	20.6

RTK (S–PVQFN–N20) PLASTIC QUAD FLATPACK NO–LEAD

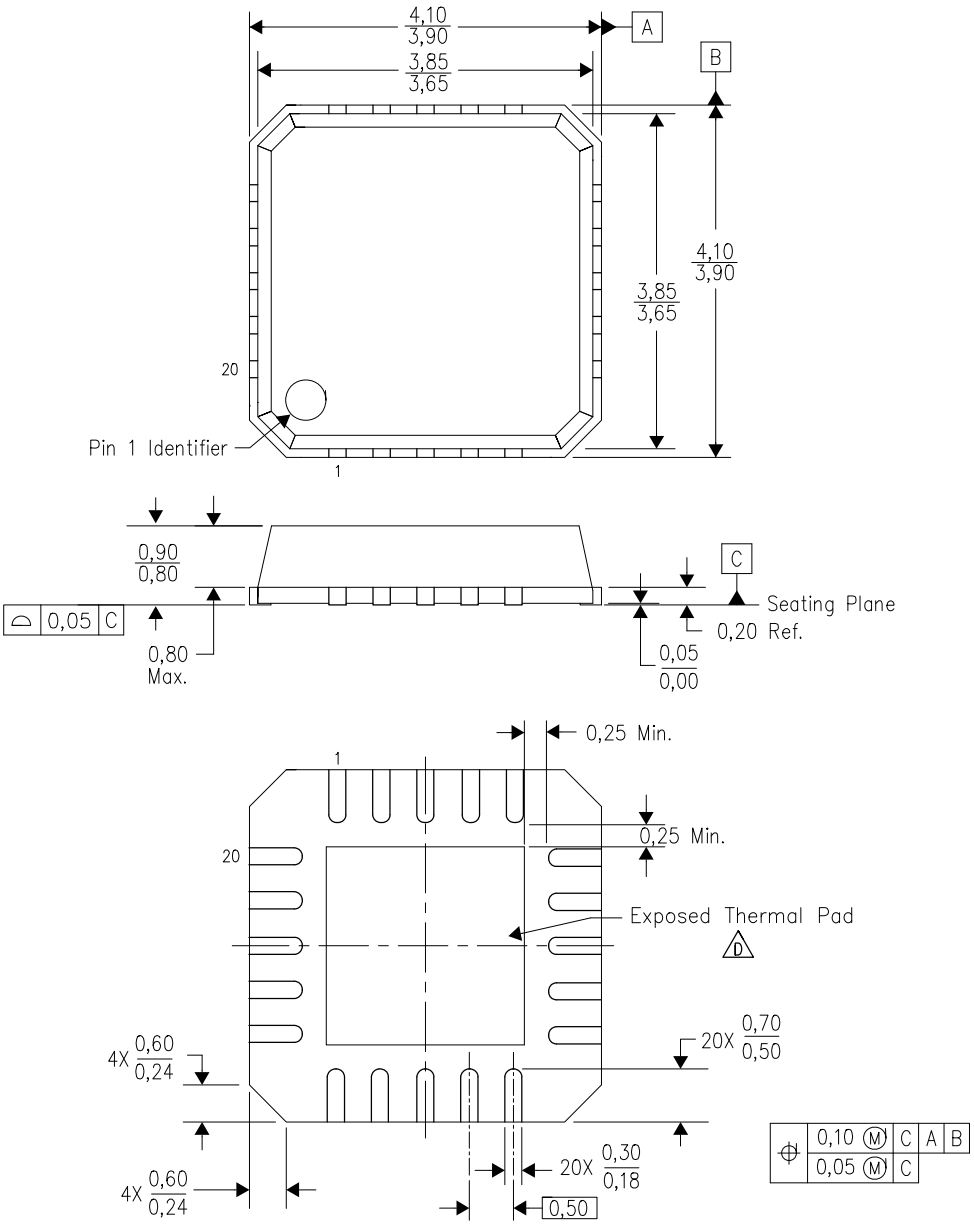

4205916/C 02/11

NOTES:
A. All linear dimensions are in millimeters. Dimensioning and tolerancing per ASME Y14.5–1994.
B. This drawing is subject to change without notice.
C. QFN (Quad Flatpack No–Lead) Package configuration.
D. The package thermal pad must be soldered to the board for thermal and mechanical performance. See the Product Data Sheet for details regarding the exposed thermal pad dimensions.

RTK (S-PVQFN-N20) PLASTIC QUAD FLATPACK NO-LEAD

THERMAL INFORMATION

This package incorporates an exposed thermal pad that is designed to be attached directly to an external heatsink. The thermal pad must be soldered directly to the printed circuit board (PCB). After soldering, the PCB can be used as a heatsink. In addition, through the use of thermal vias, the thermal pad can be attached directly to the appropriate copper plane shown in the electrical schematic for the device, or alternatively, can be attached to a special heatsink structure designed into the PCB. This design optimizes the heat transfer from the integrated circuit (IC).

For information on the Quad Flatpack No-Lead (QFN) package and its advantages, refer to Application Report, QFN/SON PCB Attachment, Texas Instruments Literature No. SLUA271. This document is available at www.ti.com.

The exposed thermal pad dimensions for this package are shown in the following illustration.

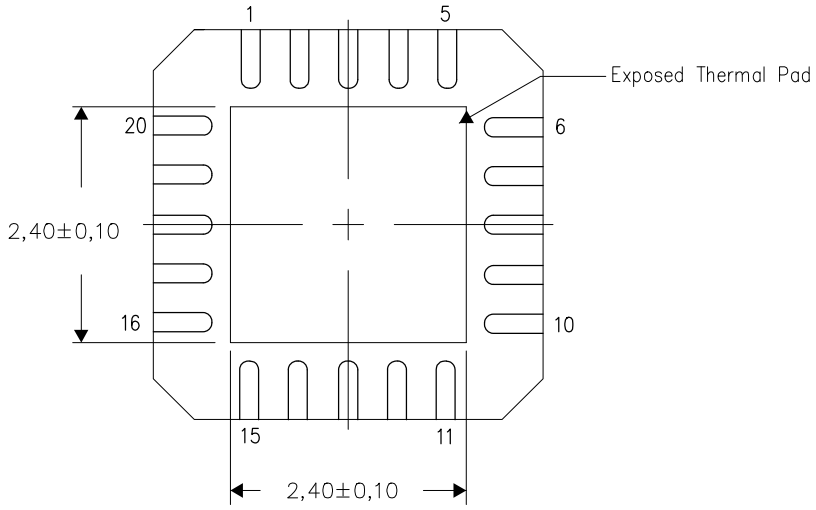

Bottom View

Exposed Thermal Pad Dimensions

4208000-3/G 02/11

NOTE: A. All linear dimensions are in millimeters

RTK (S-PVQFN-N20)

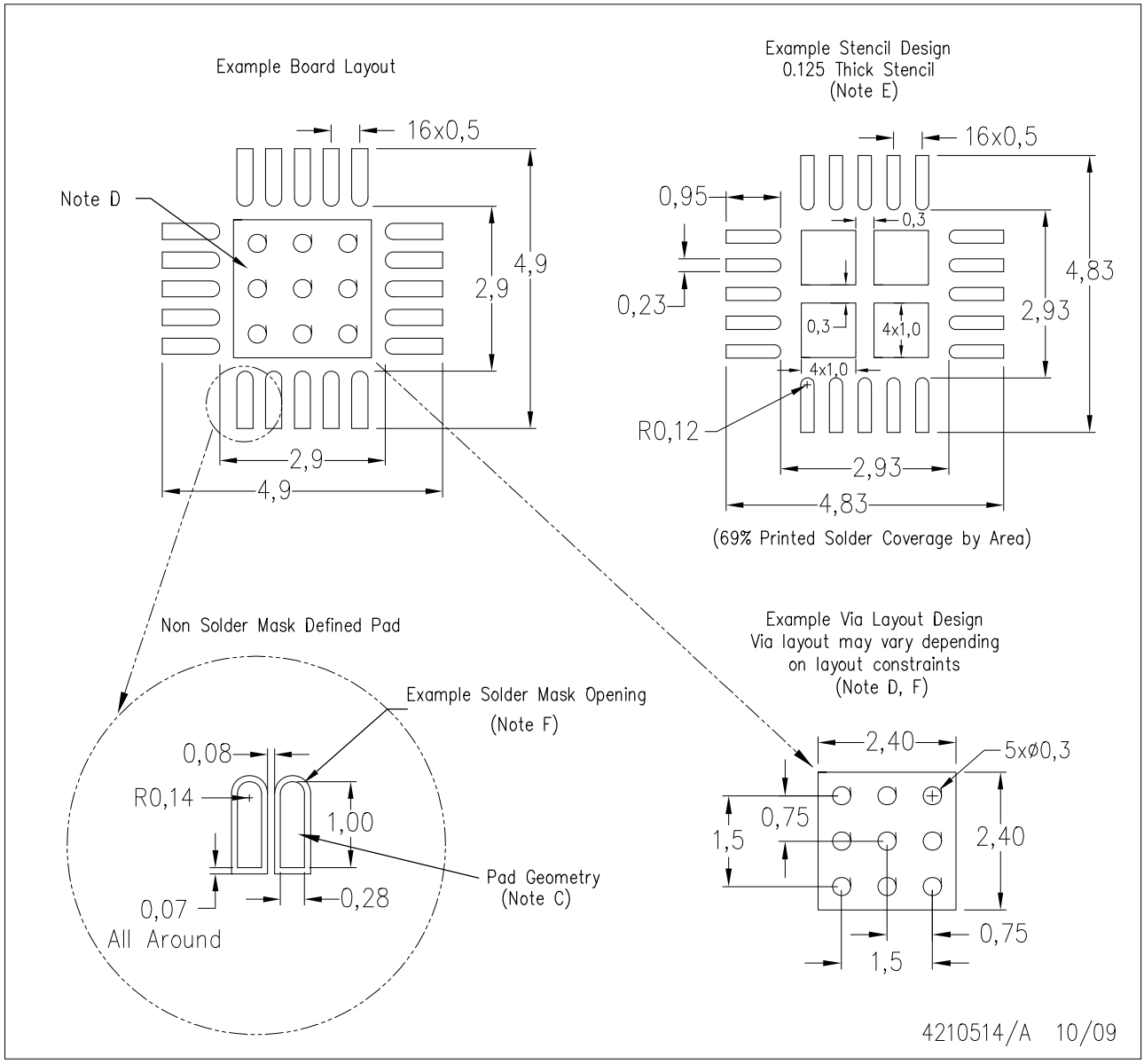

NOTES:
- A. All linear dimensions are in millimeters.
- B. This drawing is subject to change without notice.
- C. Publication IPC-7351 is recommended for alternate designs.
- D. This package is designed to be soldered to a thermal pad on the board. Refer to Application Note, Quad Flat-Pack Packages, Texas Instruments Literature No. SLUA271, and also the Product Data Sheets for specific thermal information, via requirements, and recommended board layout. These documents are available at www.ti.com <http://www.ti.com>.
- E. Laser cutting apertures with trapezoidal walls and also rounding corners will offer better paste release. Customers should contact their board assembly site for stencil design recommendations. Refer to IPC 7525 for stencil design considerations.
- F. Customers should contact their board fabrication site for recommended solder mask tolerances and via tenting recommendations for vias placed in the thermal pad.

IMPORTANT NOTICE

Texas Instruments Incorporated and its subsidiaries (TI) reserve the right to make corrections, enhancements, improvements and other changes to its semiconductor products and services per JESD46, latest issue, and to discontinue any product or service per JESD48, latest issue. Buyers should obtain the latest relevant information before placing orders and should verify that such information is current and complete. All semiconductor products (also referred to herein as “components”) are sold subject to TI’s terms and conditions of sale supplied at the time of order acknowledgment.

TI warrants performance of its components to the specifications applicable at the time of sale, in accordance with the warranty in TI’s terms and conditions of sale of semiconductor products. Testing and other quality control techniques are used to the extent TI deems necessary to support this warranty. Except where mandated by applicable law, testing of all parameters of each component is not necessarily performed.

TI assumes no liability for applications assistance or the design of Buyers’ products. Buyers are responsible for their products and applications using TI components. To minimize the risks associated with Buyers’ products and applications, Buyers should provide adequate design and operating safeguards.

TI does not warrant or represent that any license, either express or implied, is granted under any patent right, copyright, mask work right, or other intellectual property right relating to any combination, machine, or process in which TI components or services are used. Information published by TI regarding third-party products or services does not constitute a license to use such products or services or a warranty or endorsement thereof. Use of such information may require a license from a third party under the patents or other intellectual property of the third party, or a license from TI under the patents or other intellectual property of TI.

Reproduction of significant portions of TI information in TI data books or data sheets is permissible only if reproduction is without alteration and is accompanied by all associated warranties, conditions, limitations, and notices. TI is not responsible or liable for such altered documentation. Information of third parties may be subject to additional restrictions.

Resale of TI components or services with statements different from or beyond the parameters stated by TI for that component or service voids all express and any implied warranties for the associated TI component or service and is an unfair and deceptive business practice. TI is not responsible or liable for any such statements.

Buyer acknowledges and agrees that it is solely responsible for compliance with all legal, regulatory and safety-related requirements concerning its products, and any use of TI components in its applications, notwithstanding any applications-related information or support that may be provided by TI. Buyer represents and agrees that it has all the necessary expertise to create and implement safeguards which anticipate dangerous consequences of failures, monitor failures and their consequences, lessen the likelihood of failures that might cause harm and take appropriate remedial actions. Buyer will fully indemnify TI and its representatives against any damages arising out of the use of any TI components in safety-critical applications.

In some cases, TI components may be promoted specifically to facilitate safety-related applications. With such components, TI’s goal is to help enable customers to design and create their own end-product solutions that meet applicable functional safety standards and requirements. Nonetheless, such components are subject to these terms.

No TI components are authorized for use in FDA Class III (or similar life-critical medical equipment) unless authorized officers of the parties have executed a special agreement specifically governing such use.

Only those TI components which TI has specifically designated as military grade or “enhanced plastic” are designed and intended for use in military/aerospace applications or environments. Buyer acknowledges and agrees that any military or aerospace use of TI components which have ***not*** been so designated is solely at the Buyer's risk, and that Buyer is solely responsible for compliance with all legal and regulatory requirements in connection with such use.

TI has specifically designated certain components as meeting ISO/TS16949 requirements, mainly for automotive use. In any case of use of non-designated products, TI will not be responsible for any failure to meet ISO/TS16949.

Products		**Applications**	
Audio	www.ti.com/audio	Automotive and Transportation	www.ti.com/automotive
Amplifiers	amplifier.ti.com	Communications and Telecom	www.ti.com/communications
Data Converters	dataconverter.ti.com	Computers and Peripherals	www.ti.com/computers
DLP® Products	www.dlp.com	Consumer Electronics	www.ti.com/consumer-apps
DSP	dsp.ti.com	Energy and Lighting	www.ti.com/energy
Clocks and Timers	www.ti.com/clocks	Industrial	www.ti.com/industrial
Interface	interface.ti.com	Medical	www.ti.com/medical
Logic	logic.ti.com	Security	www.ti.com/security
Power Mgmt	power.ti.com	Space, Avionics and Defense	www.ti.com/space-avionics-defense
Microcontrollers	microcontroller.ti.com	Video and Imaging	www.ti.com/video
RFID	www.ti-rfid.com		
OMAP Applications Processors	www.ti.com/omap	**TI E2E Community**	e2e.ti.com
Wireless Connectivity	www.ti.com/wirelessconnectivity		

Mailing Address: Texas Instruments, Post Office Box 655303, Dallas, Texas 75265
Copyright © 2013, Texas Instruments Incorporated